Detention ponds located upstream of Lake Herman will not provide significant flood control on Silver Creek. The Silver Creek peak flow is generated by the area downstream of Lake Herman.

2. North of Madison

a. General: The Park Creek watershed above the City of Madison was evaluated to determine location, size, type and capacity of detention ponds.

b. Detention Pond No. 1: Detention Pond No. 1 is located in Section 6, Lakeview Township, just north of the City Limits on Park Creek as shown in Figure 11. Detention Pond No. 1 is proposed to be constructed with earth and roller compacted concrete because of its proximity to the City of Madison. Roller compacted concrete would provide safety to the dam by giving it an armor on the downstream side to reduce erosion if the dam was overtopped. Figure 12 shows a section of a typical roller compacted dam. The top of the proposed dam would be at elevation 1710 with a grass spillway at elevation 1705. The maximum water surface elevation and approximate storage volume is shown in the following table.

Flood Freq.	Maximum Water Surface Elevation	Volume (acre-ft)	Inflow (cfs)	Outflow w/one 48" pipe (cfs)	Outflow w/ three 48" pipes (cfs)
100-yr	1701.30	2220	4340	326	945
50-yr	1700.00	1835	3650	316	900
25-yr	1698.60	1425	2880	305	850
10-yr	1696.60	1000	2120	288	790
5-yr	1694.40	700	1535	268	724
2-yr	1693.40	320	840	240	565

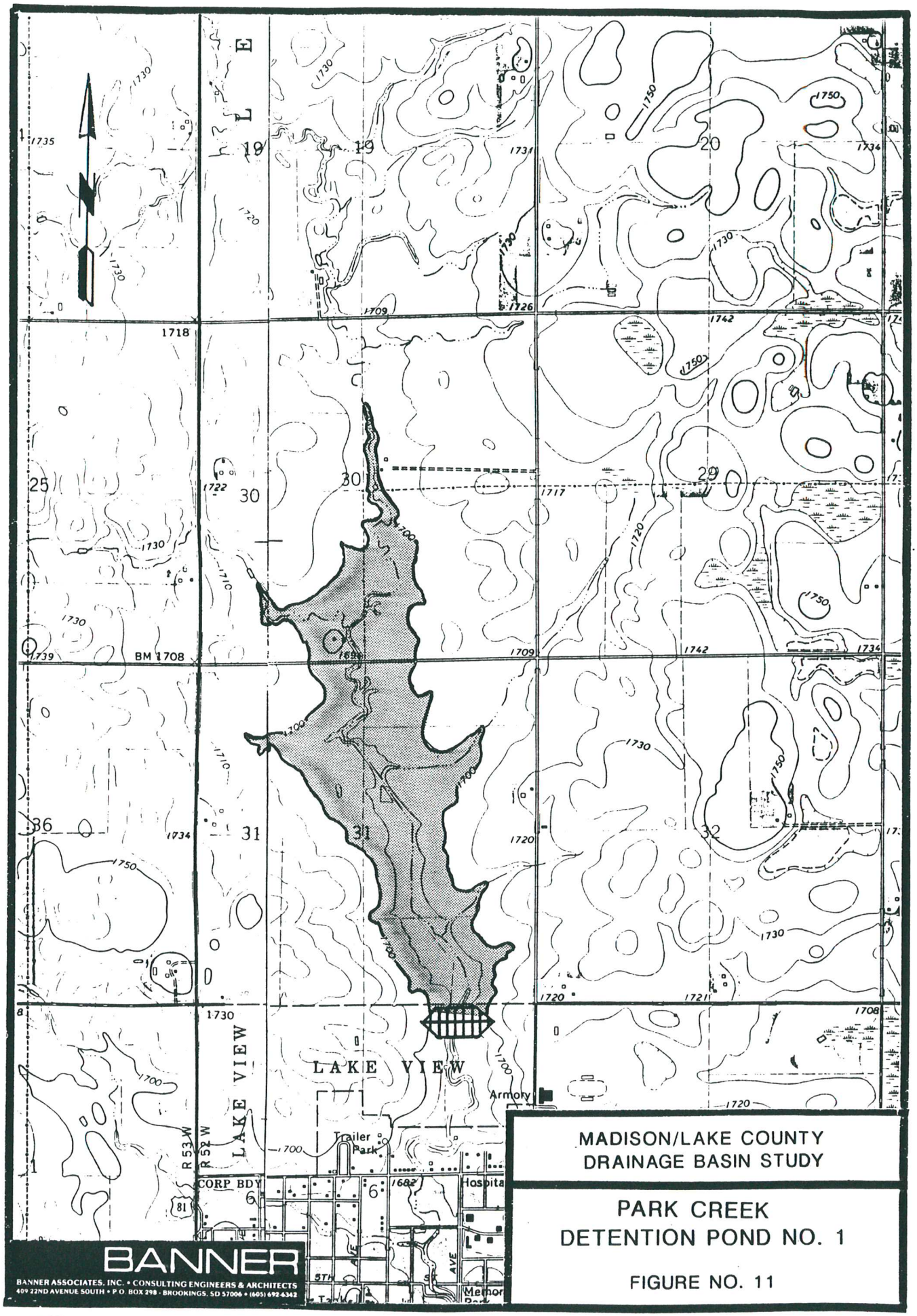

MADISON/LAKE COUNTY
DRAINAGE BASIN STUDY

PARK CREEK
DETENTION POND NO. 1

FIGURE NO. 11

7657

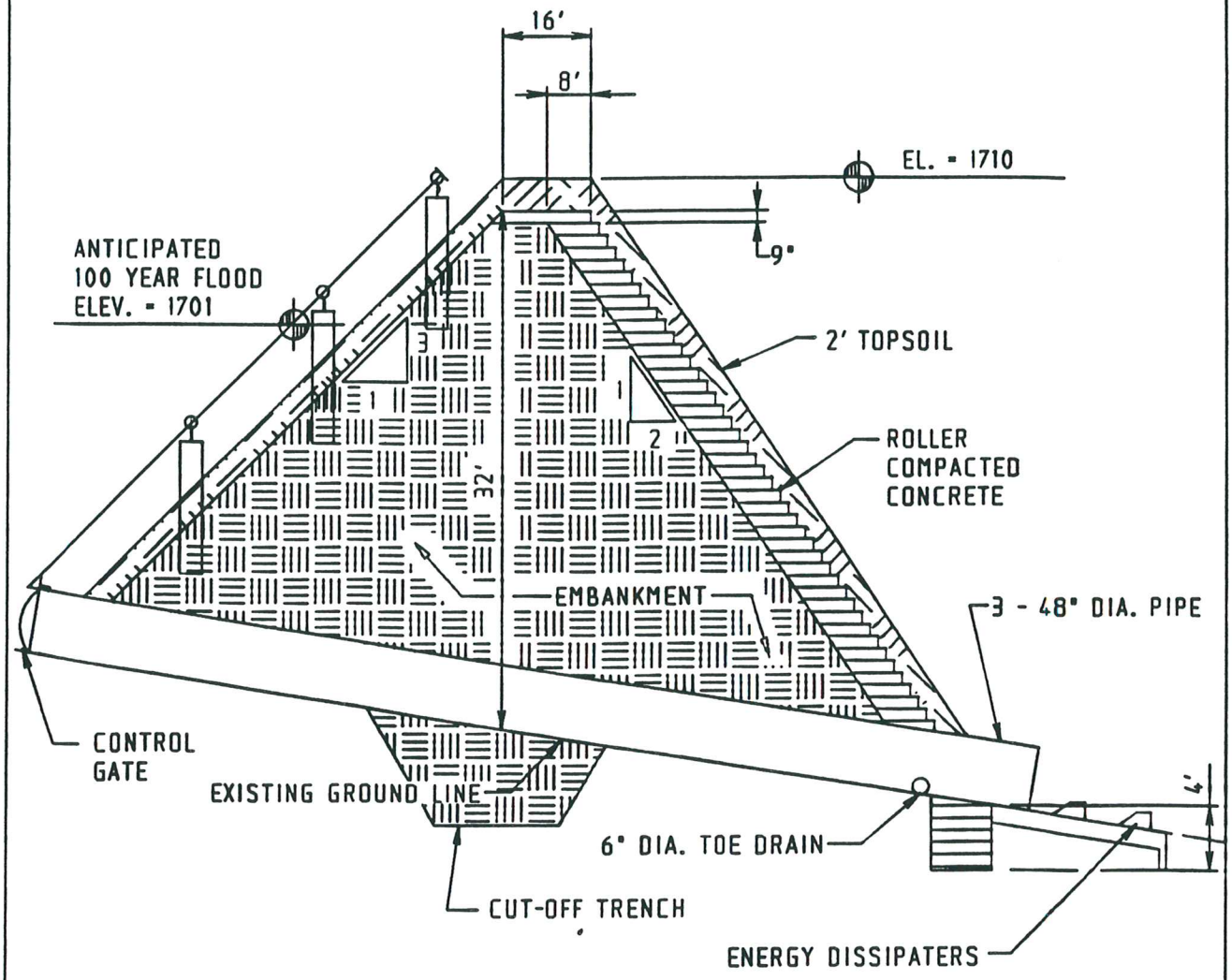

DETENTION POND SECTION

SCALE: NONE

Madison/Lake County Drainage Basin Study
Madison City Commission & Lake County Commission
ROLLER COMPACTED CONCRETE DETENTION POND SECTION FIGURE NO. 12

Another option is to construct detention pond no. 1 on the section line between section 6 and 31. The pond embankment could also serve as a road along with the dam. The dam would then have a top elevation of 1702 and a concrete road surface that would allow the dam to overtop for any storm greater than the 100-year storm. The maximum water surface behind the dam would then be established by the road surface elevation.

The flow through piping for either dam would consist of three 48" diameter pipes with sluice gates to allow control on draining the water behind the dam. Normal operation would be to have two gates closed. After a thunderstorm the second and/or third gate could be opened to drain the water behind the dam at a faster rate. The rate at which the water could be released would be limited to the ability of the stream channel in town to receive the additional flow.

c. Detention Pond No. 2: Detention Pond No. 2 is located in Section 13, Farmington Township, approximately three miles north of the City Limits and immediately west of Highway 81 as shown in Figure 13. Detention Pond No. 2 could be constructed with earth. The top of the dam would be at elevation 1740 with a grass spillway at elevation 1735. The maximum water surface elevation during the 100-year storm event would be 1735. This detention pond would store approximately 400 acre-feet of water.

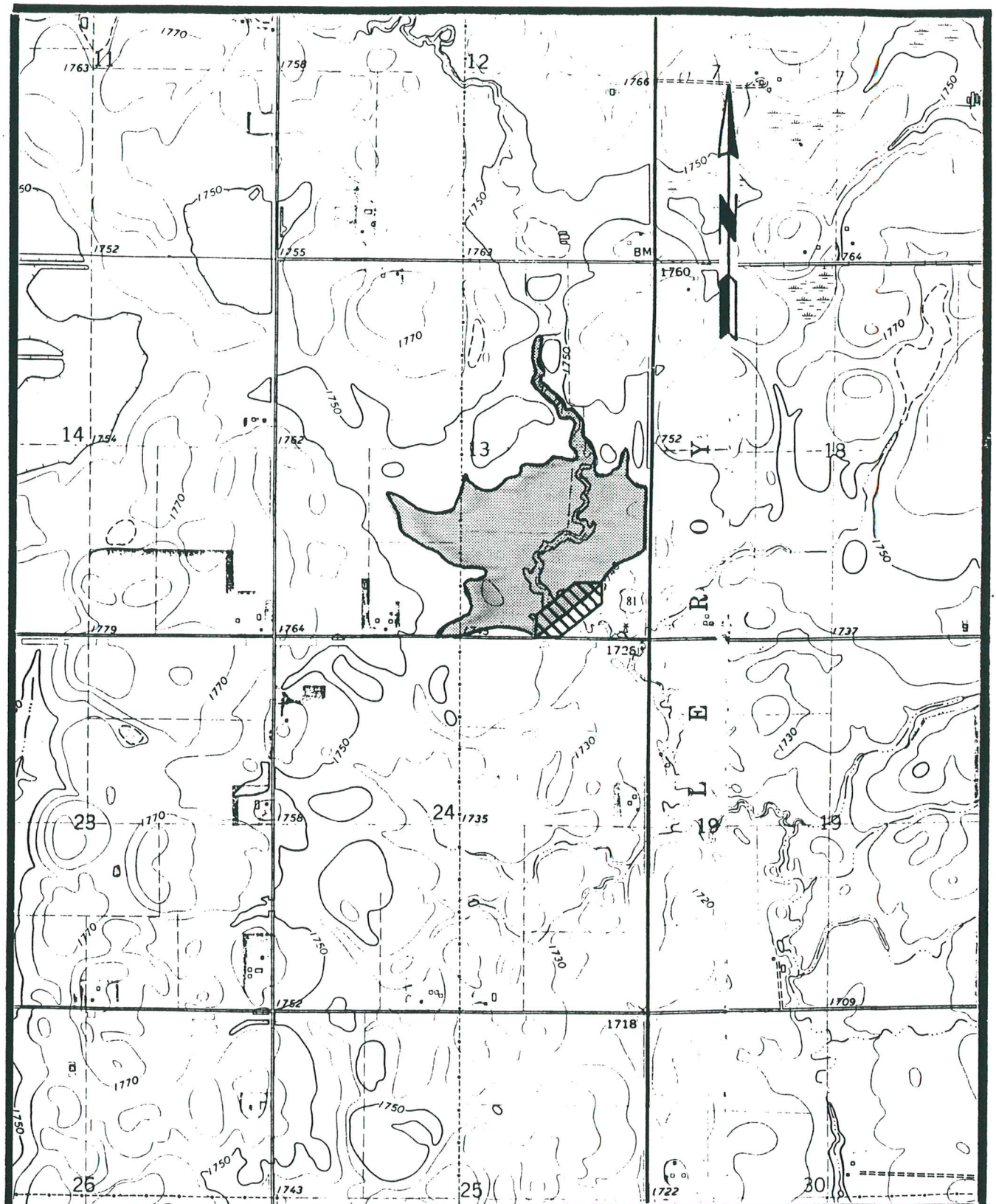

MADISON/LAKE COUNTY
DRAINAGE BASIN STUDY

PARK CREEK
DETENTION POND NO. 2

FIGURE NO. 13

BANNER
BANNER ASSOCIATES, INC. • CONSULTING ENGINEERS & ARCHITECTS
409 22ND AVENUE SOUTH • P.O. BOX 298 · BROOKINGS, SD 57006 • (605) 692-6342

d. Detention Pond No. 3: Detention Pond No. 3 is located in Section 1, Herman Township, on Park Creek Tributary at Highway 81 near the west side of Madison as shown in Figure 14. This detention pond would be created by extending the existing twin 54-inch culverts to the west of Highway 81 along with a berm over the culvert extension. The twin 54-inch culverts would terminate in a control weir structure. The control weir structure would have a 36" diameter low flow pipe to dewater the detention pond. The top of the concrete weir wall would be constructed approximately 1 to 2 feet below the Highway 81 grade such that a 100-year storm event would be routed over the weir wall and through the twin 54-inch culverts before over-topping Highway 81. This detention pond would store approximately 192 acre-feet of water.

e. Summary of Detention Ponds North of Madison: Detention Pond No. 1 and Detention Pond No. 3, located upstream of the City of Madison on Park Creek and Park Creek Tributary, provide the greatest reduction in the peak flow. These two detention ponds will have a direct affect on the flood waters within the City of Madison.

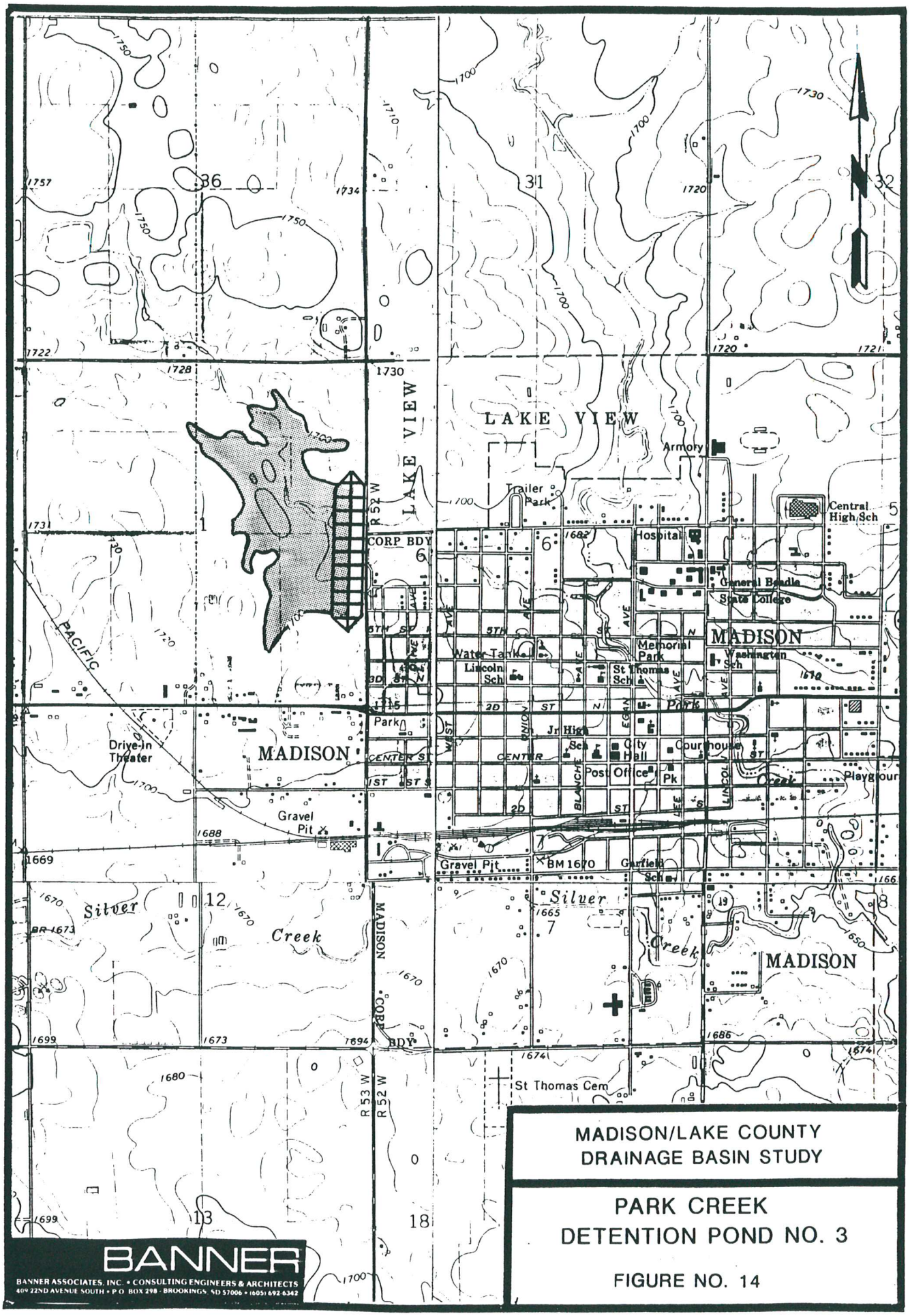

MADISON/LAKE COUNTY
DRAINAGE BASIN STUDY

PARK CREEK
DETENTION POND NO. 3

FIGURE NO. 14

BANNER
BANNER ASSOCIATES, INC. • CONSULTING ENGINEERS & ARCHITECTS
409 22ND AVENUE SOUTH • P.O. BOX 298 • BROOKINGS, SD 57006 • (605) 692-6342

H. Wetland Restoration: Reducing the flow of water into the stream channels is the ultimate way to reduce the flood peak. This study is focusing on the 100-year event. During major storm events, the typical wetland areas are full and contribute water directly to the stream channels. Therefore, wetlands do not significantly reduce the peak flow during the 100-year storm event. During normal rainfall events, wetland areas will reduce the peak if they are not full.

Wetland areas do provide areas where sediment can settle out which improves the water quality going into the area lakes. Also, wetlands provide food, water, cover and space for hundreds of birds, mammals and plants. Wetland waters also percolate into the ground to recharge underground aquifers. Wetlands also decrease erosion and provide soil stability because the wetland vegetation binds the soil together.

Wetlands may be restored or created by plugging a ditch or constructing a low earthen dam. Three areas that have the potential for large permanent wetlands are shown on Figure 15, Wetland Restoration. Other small areas exist at various locations throughout the watershed. Local, State and Federal Governments and Agencies can implement conservation policies that create and protect wetlands. It would take approximately 1,100 acres of wetlands with an average water depth of 2 feet to be equivalent to the water impounded by the proposed Detention Pond #1 north of Madison

I. Establish Floodway: The City of Madison in conjunction with the Federal Emergency Management Agency has started a program of acquiring property within the City Limits and relocating the occupants. This program can become the first step in developing a floodway or green-way through the City along the stream channels. Low lying areas next to the channels can then be converted to City Parks and recreation areas. The advantage of creating a buffer zone along the streams is to allow the water to flood the area without causing personal property damage. A typical method of establishing a floodway is shown on Figure 16.

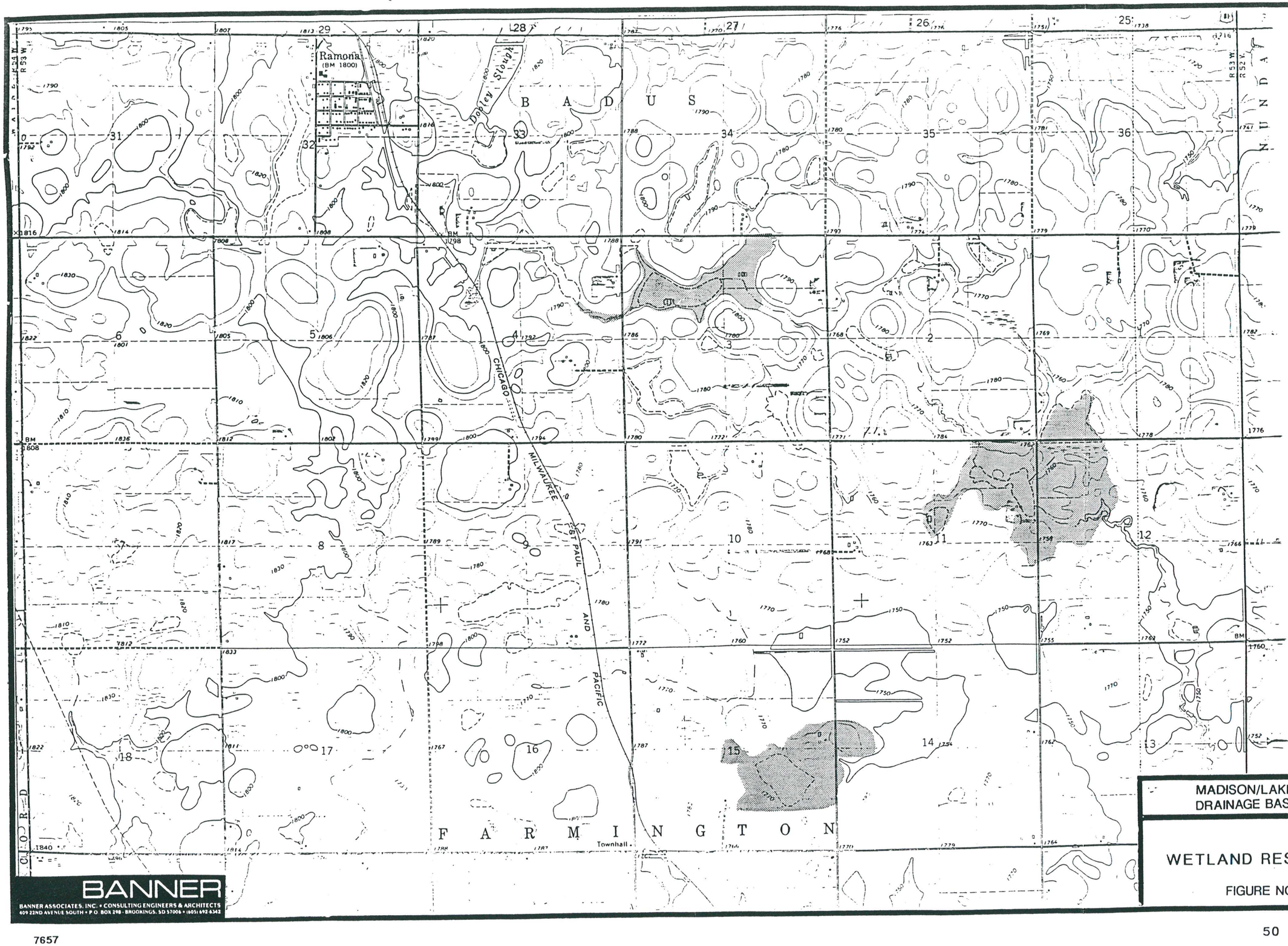

BANNER

BANNER ASSOCIATES, INC. • CONSULTING ENGINEERS & ARCHITECTS
409 22ND AVENUE SOUTH • P.O. BOX 298 • BROOKINGS, SD 57006 • (605) 692-6343

MADISON/LAKE COUNTY
DRAINAGE BASIN STUDY

WETLAND RESTORATION

FIGURE NO 15

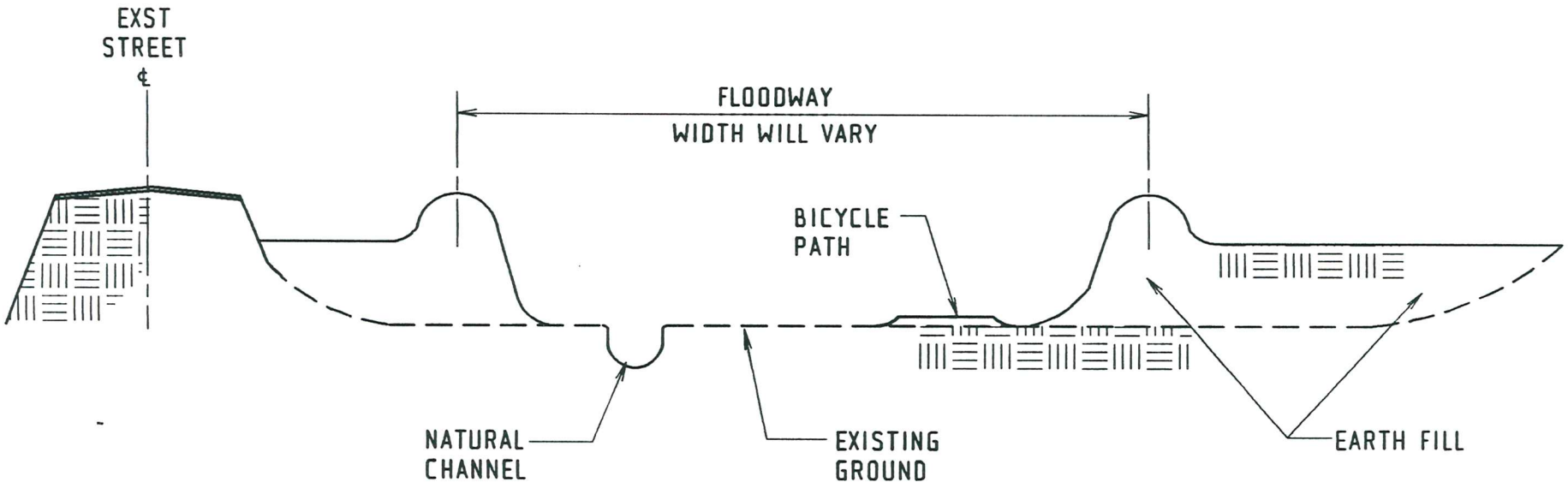

MADISON/LAKE COUNTY
DRAINAGE BASIN STUDY

FLOODWAY

FIGURE NO. 16

BANNER
BANNER ASSOCIATES, INC. • CONSULTING ENGINEERS & ARCHITECTS
409 22ND AVENUE SOUTH • P.O. BOX 298 • BROOKINGS, SD 57006 • (605) 692-6342

J. Site Specific Alternatives : Site specific alternatives include flood walls, levees/berms or floodproofing structures. Individual businesses or housing units located near the floodway fringe can be protected from flood water by the use of flood walls, berms or floodproofing of existing foundation walls. Typical installation of levees and floodwalls are shown on Figures 17 through 20. These alternatives are site specific and will depend on the selected plan and location of the building to be protected.

One site that could be protected with a berm is Gehl Industries. The bypass road would have to be raised approximately 2 feet at the intersection of Seventh Street SW. Seventh Street SW would also have to be raised or an earth berm constructed on the north side of the street. A berm would also have to be constructed along the east side of the Gehl buildings between the drainage channel and the building. An interceptor ditch would have to be constructed along the south side of the Gehl property to intercept the runoff from the land south of this property. The existing culverts across Seventh Street would have to be extended and retrofitted with check gates and manual gates to allow water to drain from the Gehl property yet prevent flood waters from backing up on the Gehl property. A large trash pump (>2,000 gpm) should also be available to pump site storm water over the berm during an extended rainstorm event.

Another option for the Gehl Industries is to construct a combination of small berms and flood walls at the building. Access to the building could be provided through removable plate sections in the floodwall.

The Bethel Lutheran Home evacuated all residents from their site during the 1993 flood. The HEC II computer model indicates the 100-year flood will not flood this site; however, the water surface will be close. A small landscaping berm 1 to 2 feet high constructed near the buildings would provide some added protection to this site. The existing stormwater piping would have to be retrofitted with

valves and manual gates to prevent water from backing up the pipes during a flood event. The design and location of the berm should incorporate plans to minimize the amount of water trapped behind the berm and a method of removing the water if necessary during a flood event.

K. Bank Stabilization and Erosion Control: Erosion can cause considerable damage during a flood event. Controlling the velocity of the water will reduce the erosion. Erosion control must start at the very beginning of the watershed. Wetlands can be an effective means of controlling agricultural erosion. Another method employed with agricultural land is the use of grassed water ways and vegetative filter strips. The filter strip is located near the lower edge of fields, above terraces or diversions or on areas adjacent to wetlands, ponds, lakes or waterways. The filter strip serves as a buffer that allows the water to slow down reducing the erosion and sediment transport. Proper farming practices in combination with grassed waterways, filter strips and wetlands can also effectively reduce erosion. Local governments, associations and private land owners can work through the Soil Conservation Service on establishing riparian protection projects.

LEVEE WIDTH TO HEIGHT RELATIONSHIPS ARE CALCULATED WITH THIS FORMULA:
WIDTH AT BASE = [(HORIZONTAL TO VERTICAL SLOPE ON RIVERSIDE) X HEIGHT]
+ [(HORIZONTAL TO VERTICAL SLOPE ON LANDSIDE) X HEIGHT]
+ WIDTH OF LEVEE AT TOP

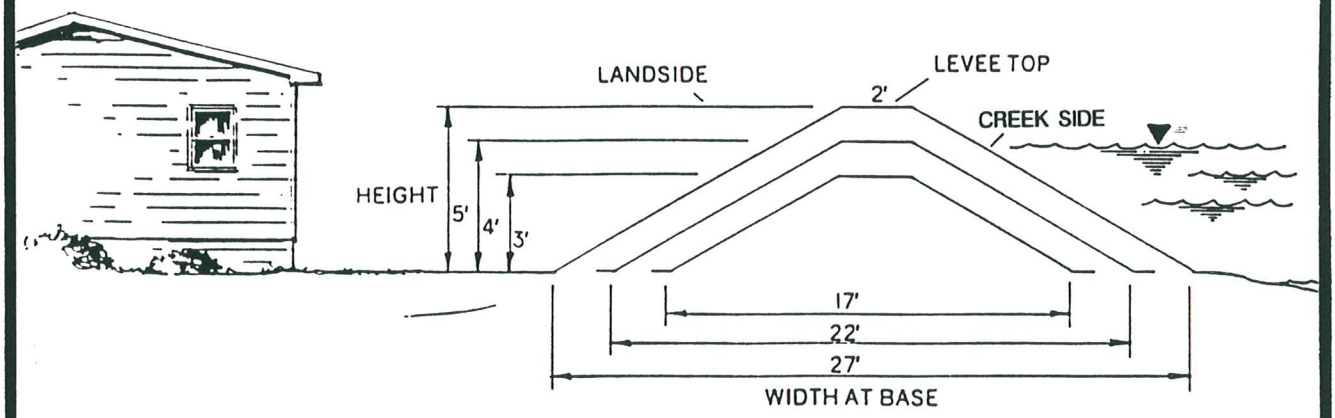

CHAPTER 5 LEVEE CHAPTER 6 FLOODWALL
DESIGN MANUAL FOR RETROFITTING
FLOOD-PRONE RESIDENTIAL STRUCTURES
(FEDERAL EMERGENCY MANAGEMENT AGENCY)

MADISON/LAKE COUNTY
DRAINAGE BASIN STUDY

LEVEES

FIGURE NO. 17

BANNER
BANNER ASSOCIATES, INC. • CONSULTING ENGINEERS & ARCHITECTS
410 22ND AVENUE SOUTH • P.O. BOX 298 • BROOKINGS, SD 57006 • (605) 692-6342

CHAPTER 5 LEVEE CHAPTER 6 FLOODWALL
DESIGN MANUAL FOR RETROFITTING
FLOOD-PRONE RESIDENTIAL STRUCTURES
(FEDERAL EMERGENCY MANAGEMENT AGENCY)

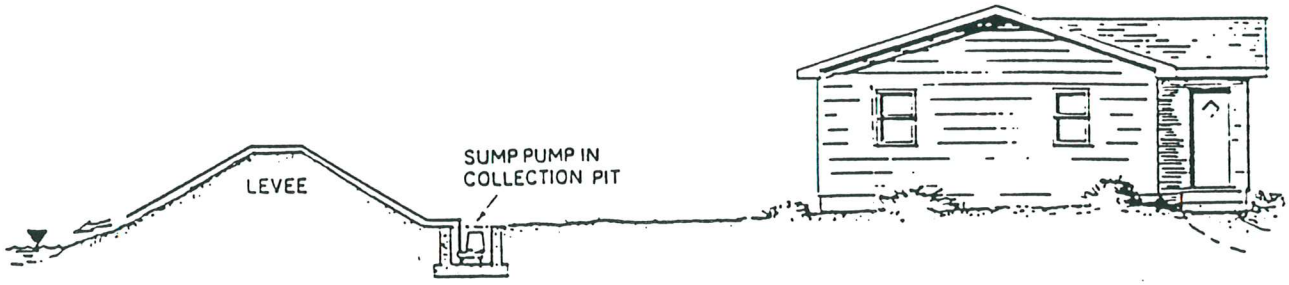

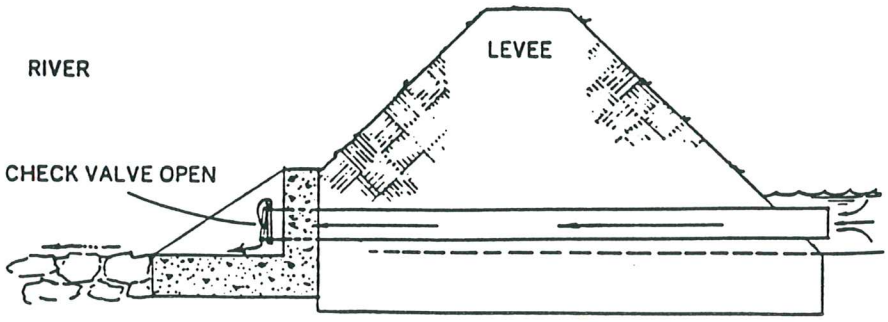

NORMAL

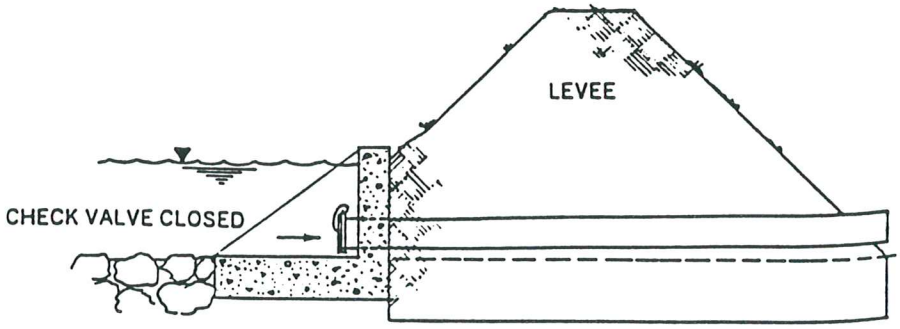

FLOOD

TECHNIQUES FOR DISCHARGING WATER
COLLECTED BEHIND THE LEVEE

MADISON/LAKE COUNTY
DRAINAGE BASIN STUDY

LEVEE DETAILS

FIGURE NO. 18

BANNER
BANNER ASSOCIATES, INC. • CONSULTING ENGINEERS & ARCHITECTS
409 22ND AVENUE SOUTH • P.O. BOX 298 - BROOKINGS, SD 57006 • (605) 692-6342

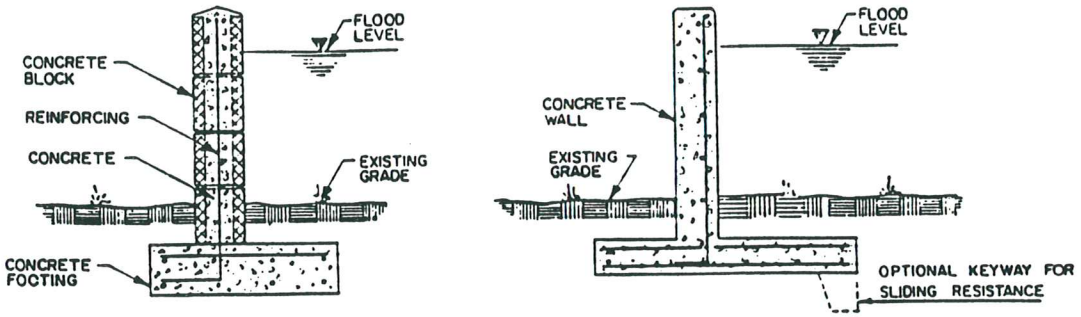

CONCRETE CANTILEVER FLOODWALL

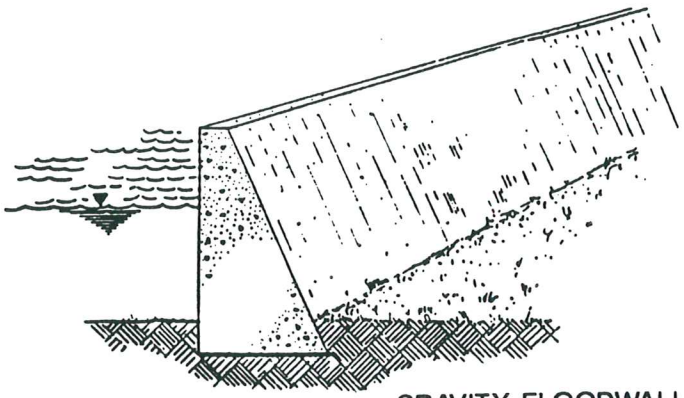

GRAVITY FLOODWALL

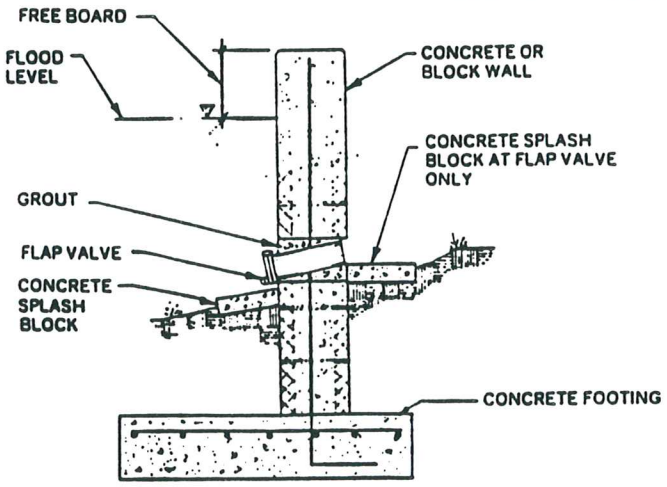

TYPICAL FLOOD WALL WITH CHECK VALVE

CHAPTER 5 LEVEE CHAPTER 6 FLOODWALL
DESIGN MANUAL FOR RETROFITTING
FLOOD-PRONE RESIDENTIAL STRUCTURES
(FEDERAL EMERGENCY MANAGEMENT AGENCY)

MADISON/LAKE COUNTY
DRAINAGE BASIN STUDY

FLOODWALLS

FIGURE NO. 19

BANNER
BANNER ASSOCIATES, INC. • CONSULTING ENGINEERS & ARCHITECTS
409 22ND AVENUE SOUTH • P O BOX 298 • BROOKINGS, SD 57006 • (605) 692-6342

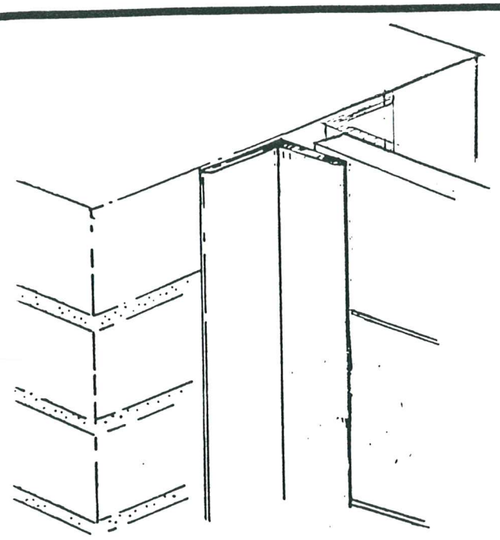

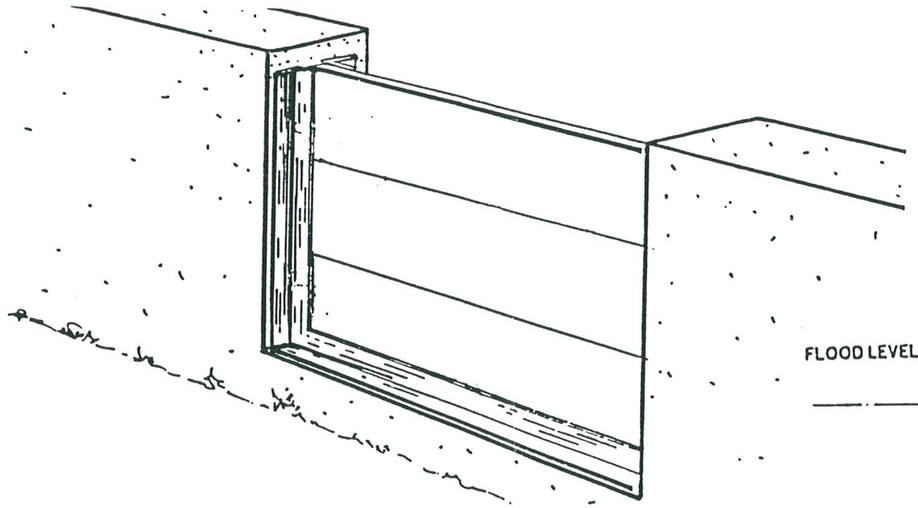

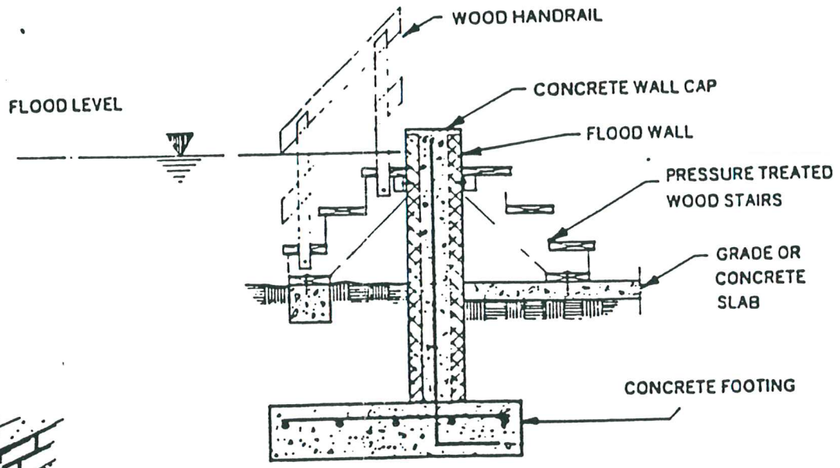

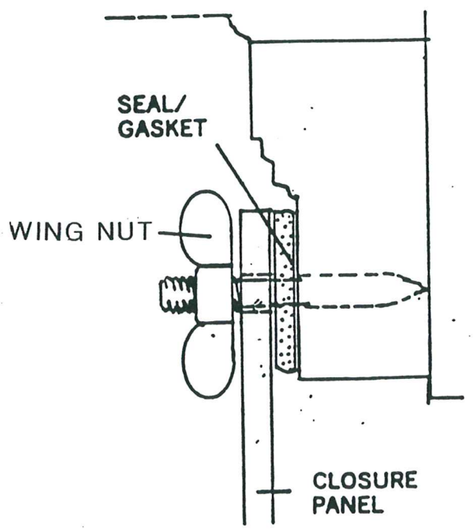

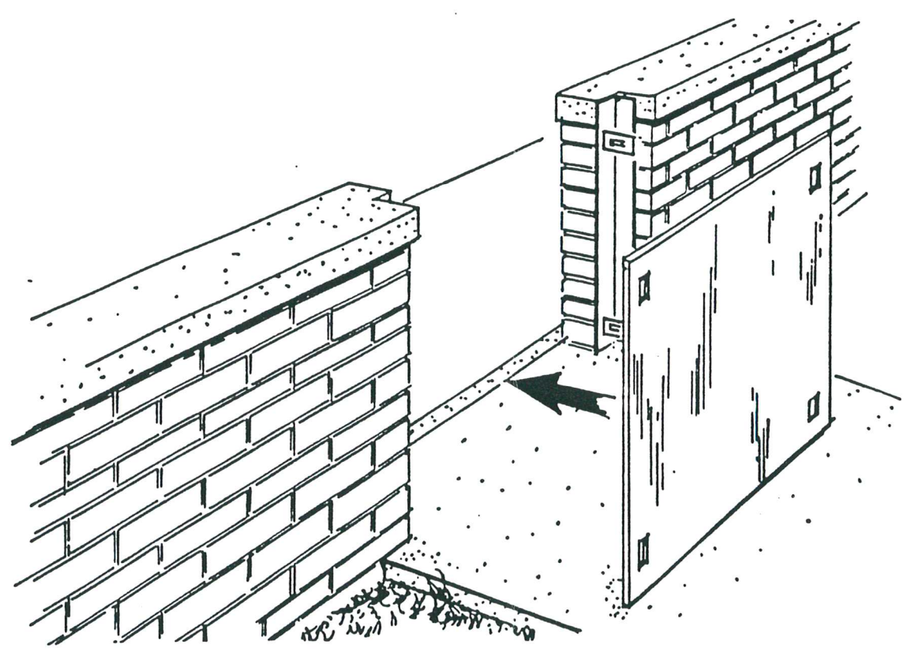

TECHNIQUES FOR PASSAGE THROUGH OR OVER A FLOODWALL

CHAPTER 5 LEVEE CHAPTER 6 FLOODWALL
DESIGN MANUAL FOR RETROFITTING
FLOOD-PRONE RESIDENTIAL STRUCTURES
(FEDERAL EMERGENCY MANAGEMENT AGENCY)

MADISON/LAKE COUNTY
DRAINAGE BASIN STUDY

FLOODWALL DETAILS

FIGURE NO. 20

BANNER
BANNER ASSOCIATES, INC. • CONSULTING ENGINEERS & ARCHITECTS
404 22ND AVENUE SOUTH • P.O. BOX 298 • BROOKINGS, SD 57006 • (605) 692-6342

At some locations the natural soils along the stream channels are permeable soils because they contain sand and gravels. Permeable soils are more erodible, and banks will likely be undermined and fall into the stream. Lining channel banks where this soil erosion is evident is one method used to control erosion. A portion of the existing stream channel along Park Creek has been lined with rock and mortar and has effectively reduced erosion. Another area where bank stabilization could be used is in the reach of Lower Park Creek between Highway 34 and Lake Madison. There are some areas where the banks are eroding and sloughing into the stream channel.

Park Creek flows into Bourne Slough prior to entering Lake Madison. Bourne Slough is a natural sedimentation basin and can be used to contain the sediment that would flow into Lake Madison. Bourne Slough should be dredged periodically to improve its effectiveness for sediment control.

Erosion along lake shores is caused by wave action during a time when water surface elevation is higher than normal. Thus controlling the water surface elevation will reduce lake shore erosion. Bank stabilization along the lake shores can also be accomplished with large rock, riprap, gabion/wire baskets and commercial retaining walls.

Typical methods of bank stabilization are shown on Figure 21.