MADISON South Dakota

Engineering Department

Guidelines for Residential Construction
2012 International Residential Code
2012 International Building Code

This book is provided to help answer questions that you may have regarding residential building codes within the City of Madison. It is not intended to answer all questions that may arise on any given project, but to serve as a guideline and reference. It is not all-inclusive of all builder and owner responsibilities or code requirements. Portions of this book are reproduced directly from the 2012 International Residential Code (IRC), the 2012 International Building Code (IBC), and other documents published by the International Code Council (ICC), and American Wood Council. The publishers of these documents do not endorse this publication as a complete exposition of the requirements of ICC codes as they relate to residential buildings due to amendments and local adjustments but the codes and standards referenced in this document are considered part of code requirements.

It is recommended in addition to this book, that you also have a copy of the 2012 IRC. It can be obtained by ordering on-line at www.iccsafe.org/store.

Contact Information:

Building Permits and Inspection
City of Madison
Ryan Hegg, CFM
Building Official
605-256-7513

Zoning
City of Madison
Chad Comes, PE
City Engineer
605-256-7514

Plumbing Permits and Inspection
State Plumbing Commission
308 South Pierre Street
c/o 1320 E Sioux Avenue
Pierre, SD 57501
Phone: 605.773.3429

Electrical Permits and Inspection:
South Dakota Electrical Commission
308 S. Pierre St.
Pierre, SD 57501
1-800-233-7765 or
605-773-3573

MADISON South Dakota
Engineering Department

Table of Contents

Administrative Provisions…….. 3-4
Climatic and Geographic Design Criteria……...…… 5
Structural Design Criteria…….. 6-7
Location on Lot……... 8-9
Foundations……. 10-23
Wood Floor Framing…….. 24-32
Wall Construction……... 33-60
Wall Covering…….. 61-68
Roof and Ceiling Construction…….…69-85
Roof Assemblies…….. 86-91
Stairways…….…. 92
Egress Windows…….. 93-94
Smoke Alarms…….. 95-96
Carbon Monoxide Detectors……..97
Dwelling Unit Separation……98-99
Glazing……..……100-103
Toilet, Bath, and Shower Spaces…… 104
Light, Ventilation and Heating...……105-106
Whole-house Mechanical Ventilation..…… 107
Prescriptive Residential Wood Deck……... 108-120
Plan Submittal Forms……..121-127
Notes ……120-131

City of Madison
PO Box 308 · 116 W. Center Street · Madison, SD 57042
(605) 256-7514 · (605) 256-7511(*Fax*)
www.cityofmadisonsd.com

Administrative Provisions

Building Permits: No building or structure regulated by code shall be erected, constructed, enlarged, altered, repaired, replaced, moved, improved, removed, converted or demolished unless a separate permit for each building or structure has first been obtained.

Work Exempt from Permits:

R105.2. Work exempt from permit. Permits shall not be required for the following.

1. One-story detached accessory structures used as tool and storage sheds, playhouses and similar uses, provided the floor area does not exceed 120 square feet.
2. Retaining walls that are not over 4 feet in height measured from the bottom of the footing to the top of the wall, unless supporting a surcharge.
3. Water tanks supported directly upon grade if the capacity does not exceed 5,000 gallons and the ratio of height to diameter or width does not exceed 2 to 1.
4. Painting, papering, tiling, carpeting, countertops and similar finish work.
5. Prefabricated swimming pools that are less than 24 inches deep.
6. Swings and other playground equipment.
7. Window awnings supported by an exterior wall which do not project more than 54 inches from the exterior wall and do not require additional support.
8. Replacement of like siding and roofing.
9. Gutters, downspouts, and storm windows.

If an item is not on this explicit list, it needs a building permit even if the work is a replacement or repair. Exemption from permit requirements of this code shall not be deemed to grant authorization for any work to be done in any manner in violation of the provisions of this code or any other laws or ordinances of this jurisdiction.

Permit Fees: Building permit fees are based on the total valuation for each project.

Building Permit Fees	
Total Cost of Construction	Fees
$0.00 - $500.00	$10.00
$500.00 - $1,000.00	$25.00
$1,001.00 - $25,000.00	$25.00 for the first $1,000.00 plus $9.00 for each additional $1,000.00 to and including $25,000.00
$25,001.00 - $50,000.00	$241.00 for the first $25,000.00 plus $6.50 for each additional $1000.00 to and including $50,000.00
$50,001.00 - $100,000.00	$403.50 for the first $50,000.00 plus $4.50 for each additional $1000.00 to and including $100,000.00
$100,001.00 - $500,000.00	$628.50 for the first $100,000.00 plus $3.50 for each additional $1000.00 to and including $500,000.00
$500.001.00 - $1,000,000.00	$2028.50 for the first $500,000.00 plus $3.00 for each additional $1000.00 to and including $1,000,000.00
$1,000,001.00 and up	$3528.50 for the first $1,000,000.00 plus $2.00 for each additional $1000.00 thereafter

Flat fees:	
Non-like roofing only	$20.00
Non-like siding only	$20.00
Demolition	$10.00
Manufactured Homes on rental lots	$25.00

The base valuation to determine permit fees for new residential buildings and additions are at minimum based on a dollar per square foot schedule per the Building Valuation Data table as published by the International Code Council with a local modifier of .7 and then applied to the chart above. For all other work, the total bid price is the base valuation and that value shall apply to the fee chart above.

Plans: A set of plans to scale is required for permits. A normal set of plans for a new dwelling or addition includes a plot plan, a foundation plan, floor and roof plan, elevations, construction sections and details. Plans shall be to scale. This list is normally what is required although in some cases additional information may be required and in some other instances, items may be removed from the list at the discretion of the City of Madison. Please see pages xx-xx for examples of these plan sheets.

Posting Permit: When a building permit is approved, the permit placard (red card) issued shall be posted so it is visible from the street. This placard lists the inspections necessary on the permit and shall remain in place until the final inspection has been completed.

Inspections: All construction for which a permit is required shall be subject to inspection by the Building Official or designated Building Inspector and all such construction shall remain accessible and exposed for the inspection purposes until approved by the inspector. It is the owner's and/or contractor's responsibility to notify the Building Official for the required inspections. Please call City Engineering 605-256-7513 for all of the required inspections as noted on the building permit placard issued for the permit. Please call a minimum of four hours before inspection is needed.

- ✓ Footing Inspection: To be made after excavation for footings are complete and any required reinforcing steel is in place but before any concrete has been poured.
- ✓ Foundation Wall Inspection: To be made after wall forms and required reinforcing is in place but before any concrete has been poured.
- ✓ Framing Inspections: To be made after roof, all framing, fire blocking and bracing are in place and all pipes, chimneys and vents are complete. The rough electrical, plumbing and heating wires, pipes and ducts shall be already approved prior to framing inspection.
- ✓ Lath and/or gypsum board (drywall/sheetrock) Inspection: To be made after all gypsum board, interior and exterior is in place, but before any plastering is applied or gypsum board joints and fasteners are taped and finished.
- ✓ Final Inspection: To be made after finish grading and the building is completed and ready for occupancy.
- ✓ Other Special Inspections: As noted on the building permit, under special conditions.

Certificate of Occupancy: No building or structure shall be used or occupied, and no change in the existing occupancy classification of a building or structure or portion thereof shall be made until the Building Official has issued a certificate of occupancy therefore as provided herein and final inspections have been obtained from the state electrical commission, state plumbing commission, and city engineering department. Issuance of a certificate of occupancy shall not be construed as an approval of a violation of the provisions of this code or of other ordinance of this jurisdiction. Certificates presuming to give authority to violate or cancel the provisions of this code or other ordinances of the city shall not be valid.

Climatic and Geographic Design Criteria

IRC Table R301.2(1) Climatic and Geographic Design Criteria, is amended/inserted as follows:

- Ground Snow Load: 40 psf contour [Figure R301.2(5) Ground Snow Load for the United States IRC] or as an alternate;
  Roof slopes with a rise of 3 inches or less to 12 inches shall be designed for a full and unbalanced snow load of 30 pounds per square foot of horizontal projection. Where a roof system is designed to slope less than 1/4 inch per 12 inches, a surcharge of not less than 5 pounds per square foot in addition to the required live load due to snow shall be designed for.
- Wind Speed[d]: 90 mph
- Topographic effects[k]: No
- Seismic Design Category[f]: A
- Weathering[a]: Severe
- Frost Line Depth[b]: 42 inches (1,067 mm)
- Termite[c]: Slight to Moderate
- Winter Design Temperature[e]: -11.5 Degrees Fahrenheit
- Ice Barrier Underlayment Requirement: Yes
- Flood Hazards[g]: Madison entered into the regular program on August , 1974 (b) September 2, 2009 (c) 46079C0144C, 46079C0163C, 46079C0164C, 46079C0232C, 46079C0251C, Effective Dates September 2, 2009
- Air Freezing Index[i]: 3,000
- Mean Annual Temperature[j]: 46 degrees Fahrenheit

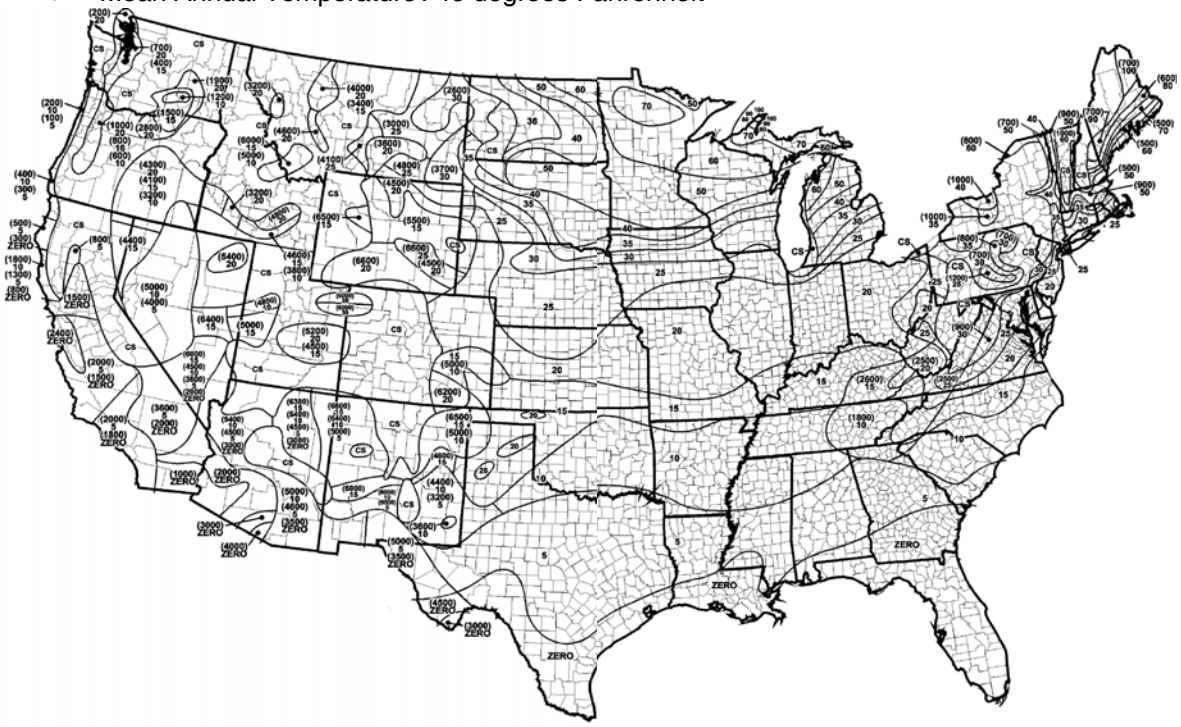

For SI: 1 foot = 304.8 mm, 1 pound per square foot = 0.0479 kPa.

FIGURE R301.2(5)—continued
GROUND SNOW LOADS, P_g FOR THE UNITED STATES (lb/ft²)

2012 INTERNATIONAL RESIDENTIAL CODE®

Structural Design Criteria

Prescriptive and Engineered Design: For structural design there are two paths you can take to achieve code compliance; prescriptive and performance. The intent of building code is to provide comprehensive standards for the conventional construction of residential buildings all the while providing design flexibility in recognizing other methods and materials of construction. For that reason, the IRC contains both prescriptive and performance requirements. *Prescriptive* means a set of rules directly from code that the builder may follow to ensure that the building complies with code. *Performance* means an expectation that the building system will function in a certain way to meet the minimum requirements of the code. In terms of structural requirements, performance is achieved through engineering.

Be aware that when using the conventional construction provisions, an engineered design is necessary only for those structural elements that exceed the limits of or are otherwise not included in the prescriptive provisions of the code. For example, the sizing of wide flange steel beams sometimes used in dwelling construction is outside the scope of the IRC and must be designed in accordance with standard engineering practice. This does not prevent the designer or builder from using the prescriptive solutions for the remainder of the building. In other words, the IRC permits partial or complete engineering of the structure and offers the prescriptive methods as an option, but they are not mandatory. When your project incorporates such items (engineered trusses, steel beams, LVL's, etc.), all information on the item must be submitted to the Building Official along with the building permit to avoid delays.

Local Standards and Amendments: There are instances, such as in the case of foundation reinforcement, that local standards are the acceptable default construction standard. Utilization of a local standard is not mandatory as prescriptive and engineered solutions may supersede at the designer's discretion (provided the replacement meets the minimum standards). Local standards are instead offered as a simplified means to achieve compliance. When there is a difference between the local standard and an engineered solution, the engineered solution shall apply.

Alternate Publications: The IRC does permit construction to comply with the Wood Frame Construction Manual (WFCM), published by the American Forest and Paper Association (AF&PA) as an alternative design basis. The WFCM offers both engineered and prescriptive design requirements for one- and two- family dwellings. The publication can be purchased at http://www.awc.org/standards/wfcm.php. At the same location, you can find webinar series that may prove to be useful. Please note on any plans submitted according to the WFCM, that the manual was utilized.

ICC-ES Reports: The IRC is explicit in its intention to not exclude the use of any material or method of construction, even if the material or methods are not specifically described by the IRC or IBC, dependent upon authorization by the building official. The building official has a responsibility, as directed by code, to grant approval to such alternatives where it is found that the proposed construction meets the intent of the code and is equal to the code. With technology advancing constantly and new products being introduced to the marketplace all the time, reports issued by the International Code Council Evaluation Service (ICC-ES) are great resources to verify if your material meets code. Please see the figure on the next page for an example. If you propose a product to be utilized that you haven't used before, the ES report will let you know if it has been explicitely approved by the 2012 IRC or IBC, respectively. You can search the reports at www.icc-es.org

ICC EVALUATION SERVICE
Most Widely Accepted and Trusted

ICC-ES Evaluation Report

ESR-1771

Reissued August 1, 2013

This report is subject to renewal September 1, 2014.

www.icc-es.org | (800) 423-6587 | (562) 699-0543 *A Subsidiary of the International Code Council®*

DIVISION: 03 00 00—CONCRETE
Section: 03 16 00—Concrete Anchors

REPORT HOLDER:

SIMPSON STRONG-TIE COMPANY INC.
5956 WEST LAS POSITAS BOULEVARD
PLEASANTON, CALIFORNIA 94588
(925)560-9000
www.strongtie.com

EVALUATION SUBJECT:

SIMPSON STRONG-TIE® STRONG-BOLT® WEDGE ANCHOR FOR CRACKED AND UNCRACKED CONCRETE

1.0 EVALUATION SCOPE

Compliance with the following codes:

- 2012, 2009, 2006, 2003 *International Building Code®* (IBC)
- 2012, 2009, 2006, 2003 *International Residential Code®* (IRC)

Properties evaluated:

Structural

2.0 USES

The Simpson Strong-Tie® Strong-Bolt® wedge anchor is used to resist static, wind and seismic tension and shear loads in cracked and uncracked normal-weight concrete and sand-lightweight concrete members having a specified compressive strength, f'_c, of 2,500 psi to 8,500 psi (17.2 MPa to 58.6 MPa).

The Strong-Bolt® complies with Section 1909 of the 2012 IBC, Section 1912 of the 2009 and 2006 IBC, and Section 1913 of the 2003 IBC. The anchors are an alternative to cast-in-place anchors described in Section 1908 of the 2012 IBC, Sections 1911 of the 2009 IBC and 2006 IBC, and Sections 1912 of the 2003 IBC. The anchors may also be used where an engineered design is submitted in accordance with Section R301.1.3 of the IRC.

3.0 DESCRIPTION

3.1 Strong-Bolt®:

Strong-Bolt® anchors are torque-controlled mechanical expansion anchors consisting of an anchor body, expansion clip, nut, and washer. A typical anchor is shown in Figure 1. The $^1/_2$-inch-, $^5/_8$-inch-, and $^3/_4$-inch-diameter (12.7 mm, 15.9 mm, and 19.1 mm) anchor bodies are manufactured from carbon steel conforming to SAE J403, Grade 1030 to 1035. The 1-inch-diameter (25.4 mm) anchor body is manufactured from carbon steel conforming to SAE J403 Grade 12L14. The anchor bodies are zinc plated in accordance with ASTM B633, SC1, Type III. The expansion clip is fabricated from ASTM A240, Grade 316, stainless steel. The washer conforms to ASTM F844. The hex nut conforms to ASTM A563, Grade A.

The anchor body has a tapered mandrel formed on the installed end of the anchor and a threaded section at the opposite end. The taper of the mandrel increases in diameter toward the installed end of the anchor. The three-segment expansion clip wraps around the tapered mandrel. Before installation, this expansion clip is free to rotate about the mandrel. The anchor is installed in a predrilled hole. When the anchor is set using an applied torque to the hex nut, the mandrel is drawn into the expansion clip, which engages the drilled hole and transfers the load to the base material. Pertinent dimensions are as set forth in Table 1.

3.2 Concrete:

Normal-weight and sand-lightweight concrete must conform to Sections 1903 and 1905 of the IBC, as applicable.

4.0 DESIGN AND INSTALLATION

4.1 Strength Design:

4.1.1 General: Design strength of anchors complying with the 2012 and 2003 IBC, as well as Section R301.1.3 of the 2012 and 2003 IRC must be determined in accordance with ACI 318-11 Appendix D and this report.

Design strength of anchors complying with the 2009 IBC and Section R301.1.3 of the 2009 IRC must be in accordance with ACI 318-08 Appendix D and this report.

Design strength of anchors complying with the 2006 IBC as well as Section R301.1.3 of the 2006 IRC must be determined in accordance with ACI 318-05 Appendix D and this report.

Design parameters provided in Tables 2 and 3 and references to ACI 318 are based on the 2012 IBC (ACI 318-11) unless noted otherwise in Sections 4.1.1 through 4.1.12 of this report. The strength design of anchors must comply with ACI 318 D.4.1, except as required in ACI 318 D.3.3. A design example in accordance with the 2009 IBC is given in Figure 4 of this report.

Strength reduction factors, ϕ, as given in ACI 318-11 D.4.3, must be used for load combinations calculated in accordance with Section 1605.2.1 of the IBC, or Section 9.2 of ACI 318. Strength reduction factors, ϕ, as given in ACI 318-11 D.4.4 must be used for load combinations calculated in accordance with Appendix C of ACI 318.

ICC-ES Evaluation Reports are not to be construed as representing aesthetics or any other attributes not specifically addressed, nor are they to be construed as an endorsement of the subject of the report or a recommendation for its use. There is no warranty by ICC Evaluation Service, LLC, express or implied, as to any finding or other matter in this report, or as to any product covered by the report.

Copyright © 2013

Location on Lot

Zoning Setbacks: Setbacks from property lines vary throughout the City, due to the different land-use zoning areas. To obtain specific setback requirements, please contact city engineering at 256-7514 or 256-7513. Prior to permit issuance, a site plan drawn to scale showing all proposed structures and setback dimensions on the lot shall be submitted to the engineering department for review and approval.

Drainage: The IRC is most concerned with drainage in the immediate vicinity of the structure. The surface of the final grade is required to fall a minimum of 6 inches within the first 10 away from the foundation. Impervious surfaces such as concrete driveways, sidewalks, and patios must be no less than 2 percent away from the structure.

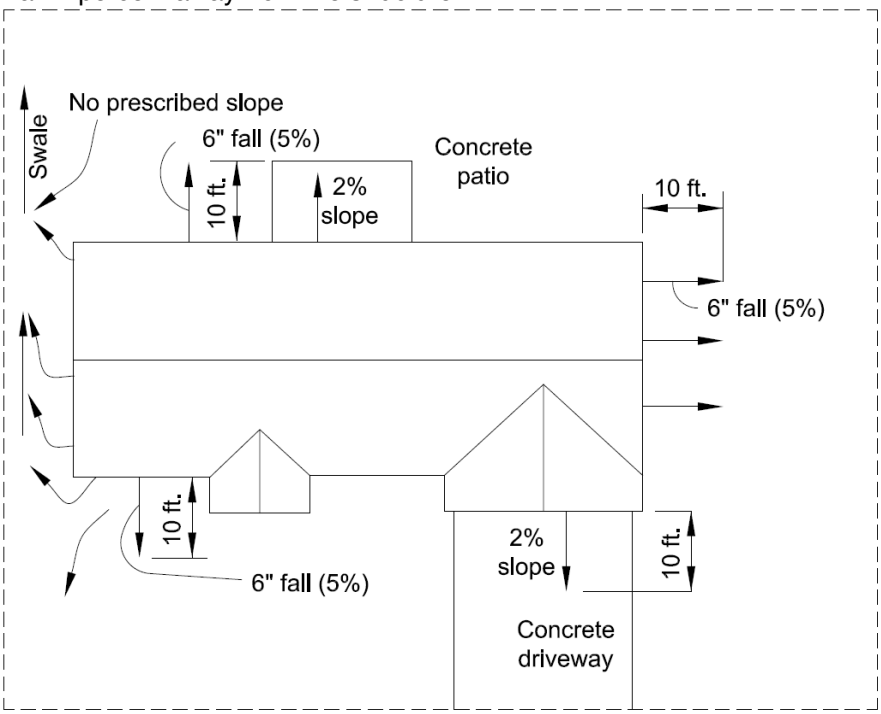

Exterior walls and Fire Separation Distances. Construction, projections, openings, and penetrations of exterior walls of dwellings and accessory buildings shall comply with the following table. These provisions apply to walls, projections, openings, or penetrations in walls perpendicular to the line used to determine fire separation distance.
Exceptions:
1. Walls, projections, openings or penetrations in walls perpendicular to the line used to determine the fire separation distance.
2. Walls of dwellings and accessory structures located on the same lot.
3. Detached tool sheds and storage sheds, playhouses and similar structures exempted from permits are not required to provide wall protection based on location on the lot. Projections beyond the exterior wall shall not extend over the lot line.
4. Detached garages accessory to a dwelling located within 2 feet (610 mm) of a lot line are permitted to have roof eave projections not exceeding 4 inches (102 mm) and walls permitted to be rated for exposure from one side.
5. Foundation vents installed in compliance with this code are permitted.

By definition, fire separation distance is measured from the face of the building to the lot line, centerline of a street or alley, or to an imaginary line between two buildings. However for all practical purposes, fire separation distance typically will be of concern only when measured to a lot line. No separation distance or fire resistance rating is required for detached structures on the same lot. Fire separation distance is measured at a right angle to the face of an exterior wall.

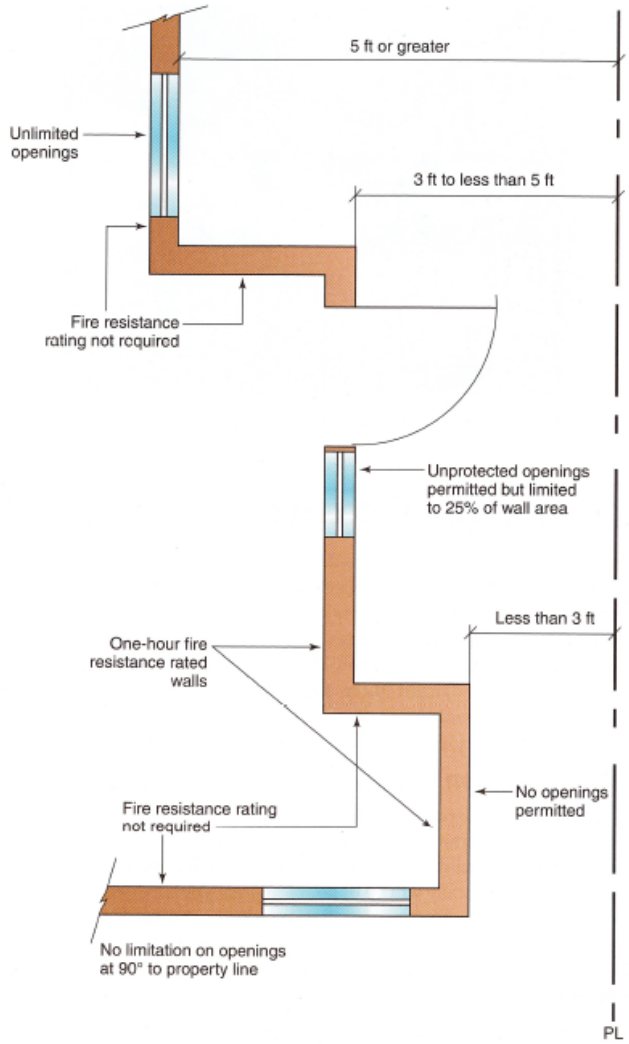

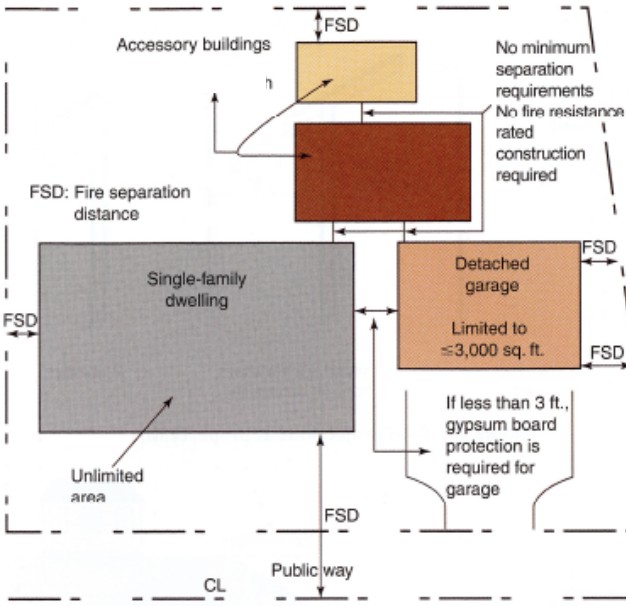

TABLE R302.1(1)
EXTERIOR WALLS

EXTERIOR WALL ELEMENT		MINIMUM FIRE-RESISTANCE RATING	MINIMUM FIRE SEPARATION DISTANCE
Walls	Fire-resistance rated	1 hour—tested in accordance with ASTM E 119 or UL 263 with exposure from both sides	< 5 feet
	Not fire-resistance rated	0 hours	≥ 5 feet
Projections	Fire-resistance rated	1 hour on the underside	≥ 2 feet to < 5 feet
	Not fire-resistance rated	0 hours	≥ 5 feet
Openings in walls	Not allowed	N/A	< 3 feet
	25% maximum of wall area	0 hours	3 feet
	Unlimited	0 hours	5 feet
Penetrations	All	Comply with Section R302.4	< 5 feet
		None required	5 feet

Foundations

General Requirements: Foundation construction shall be capable of accommodating all loads and of transmitting the resulting loads to the supporting soil. Fill soils that support footings and foundations shall be designed, installed and tested in accordance with accepted engineering practice. Gravel fill used as footings for wood and precast concrete foundations shall be washed and well graded. The maximum size stone shall not exceed 3/4 inch. Gravel shall be free from organic, clayey or silty soils. Sand shall be coarse, not smaller than 1/16-inch grains and shall be free from organic, clayey or silty soils. Crushed stone shall have a maximum size of 1/2 inch.

Drainage: Surface drainage shall be diverted to a storm sewer conveyance or other *approved* point of collection that does not create a hazard. *Lots* shall be graded to drain surface water away from foundation walls. The *grade*s hall fall a minimum of 6 inches within the first 10 feet.

- **Exception:** Where *lot lines*, walls, slopes or other physical barriers prohibit 6 inches of fall within 10 feet, drains or swales shall be constructed to ensure drainage away from the structure. Impervious surfaces within 10 feet of the building foundation shall be sloped a minimum of 2 percent away from the building.

Soil tests. Where quantifiable data created by accepted soil science methodologies indicate expansive, compressible, shifting or other questionable soil characteristics are likely to be present, the *building official* shall determine whether to require a soil test to determine the soil's characteristics at a particular location. This test shall be done by an *approved agency* using an *approved* method.

- In lieu of a complete geotechnical evaluation, the load bearing values in IRC Table R401.4.1 shall be assumed.
- Most soils encountered in Madison approximate a 2000 psf load-bearing pressure.

TABLE R401.4.1
PRESUMPTIVE LOAD-BEARING VALUES OF FOUNDATION MATERIALS[a]

CLASS OF MATERIAL	LOAD-BEARING PRESSURE (pounds per square foot)
Crystalline bedrock	12,000
Sedimentary and foliated rock	4,000
Sandy gravel and/or gravel (GW and GP)	3,000
Sand, silty sand, clayey sand, silty gravel and clayey gravel (SW, SP, SM, SC, GM and GC)	2,000
Clay, sandy clay, silty clay, clayey silt, silt and sandy silt (CL, ML, MH and CH)	1,500[b]

Wood foundations: Please contact the building official when planning a wood foundation and you will be given the specific prescriptive code requirements in their entirety. Alternatively, the foundation can be designed in accordance with standard engineering practices. Due to the length of the section in the IRC on wood foundations versus the amount of wood foundations being constructed, there is not a written wood foundation section included in this book, only this and the next page showing cross-sections for basement walls and crawlspaces. Please pay close attention to the amount of allowable backfill.

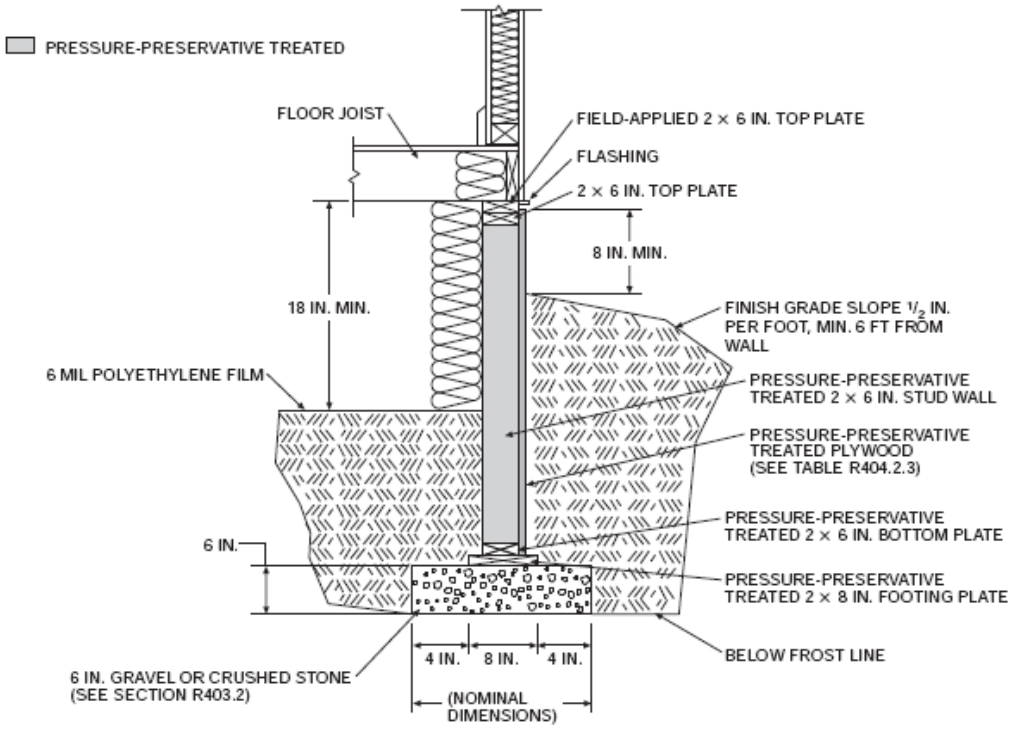

For SI: 1 inch = 25.4 mm, 1 foot = 304.8 mm, 1 mil = 0.0254 mm.

FIGURE R403.1(3)
PERMANENT WOOD FOUNDATION CRAWL SPACE SECTION

City of Madison
PO Box 308 · 116 W. Center Street · Madison, SD 57042
(605) 256-7514 · (605) 256-7511 (Fax)
www.cityofmadisonsd.com

Wood foundations cont.

FOUNDATIONS

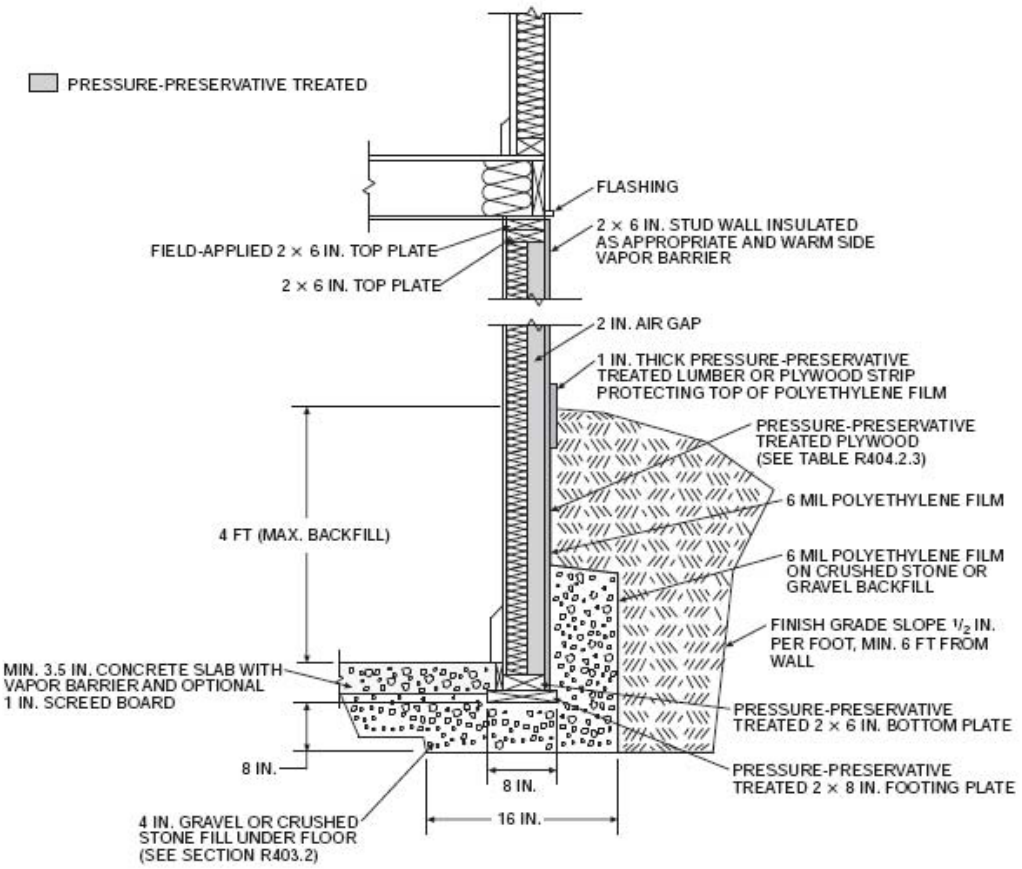

For SI: 1 inch = 25.4 mm, 1 foot = 304.8 mm, 1 mil = 0.0254.

FIGURE R403.1(2)
PERMANENT WOOD FOUNDATION BASEMENT WALL SECTION

City of Madison
PO Box 308 · 116 W. Center Street · Madison, SD 57042
(605) 256-7514 · (605) 256-7511 (Fax)
www.cityofmadisonsd.com

Concrete: Concrete shall have a minimum specified compressive strength of *f'c*, as shown in Table R402.2. Concrete, since subject to severe weathering in Madison shall be air entrained as specified in Table R402.2. The maximum weight of fly ash, other pozzolans, silica fume, slag or blended cements that is included in concrete mixtures for garage floor slabs and for exterior porches, carport slabs and steps that will be exposed to deicing chemicals shall not exceed the percentages of the total weight of cementitious materials specified in Section 4.2.3 of ACI 318. Materials used to produce concrete and testing thereof shall comply with the applicable standards listed in Chapter 3 of ACI 318 or ACI 332.

TABLE R402.2
MINIMUM SPECIFIED COMPRESSIVE STRENGTH OF CONCRETE

TYPE OR LOCATION OF CONCRETE CONSTRUCTION	MINIMUM SPECIFIED COMPRESSIVE STRENGTH[a] (f'_c)		
	Weathering Potential[b]		
	Negligible	Moderate	Severe
Basement walls, foundations and other concrete not exposed to the weather	2,500	2,500	2,500[c]
Basement slabs and interior slabs on grade, except garage floor slabs	2,500	2,500	2,500[c]
Basement walls, foundation walls, exterior walls and other vertical concrete work exposed to the weather	2,500	3,000[d]	3,000[d]
Porches, carport slabs and steps exposed to the weather, and garage floor slabs	2,500	3,000[d, e, f]	3,500[d, e, f]

For SI: 1 pound per square inch = 6.895 kPa.
a. Strength at 28 days psi.
b. See Table R301.2(1) for weathering potential.
c. Concrete in these locations that may be subject to freezing and thawing during construction shall be air-entrained concrete in accordance with Footnote d.
d. Concrete shall be air-entrained. Total air content (percent by volume of concrete) shall be not less than 5 percent or more than 7 percent.
e. See Section R402.2 for maximum cementitious materials content.
f. For garage floors with a steel-troweled finish, reduction of the total air content (percent by volume of concrete) to not less than 3 percent is permitted if the specified compressive strength of the concrete is increased to not less than 4,000 psi

74 2012 INTERNATIONAL RESIDENTIAL CODE®

Precast concrete: Precast concrete foundations shall be designed in accordance with Section R404.5 and shall be installed in accordance with the provisions of the IRC and IBC and the manufacturer's installation instructions.

Materials used to produce precast concrete foundations shall meet the following requirements.
1. All concrete used in the manufacture of precast concrete foundations shall have a minimum compressive strength of 5,000 psi at 28 days. Concrete exposed to a freezing and thawing environment shall be air entrained with a minimum total air content of 5 percent.
2. Structural reinforcing steel shall meet the requirements of ASTM A 615, A 706 or A 996. The minimum yield strength of reinforcing steel shall be 40,000 psi (Grade 40) (276 MPa). Steel reinforcement for precast concrete foundation walls shall have a minimum concrete cover of 3/4 inch.
3. Panel-to-panel connections shall be made with Grade II steel fasteners.
4. The use of nonstructural fibers shall conform to ASTM C 1116.
5. Grout used for bedding precast foundations placed upon concrete footings shall meet ASTM C 1107.

Footings: All exterior walls shall be supported on continuous solid or fully grouted masonry or concrete footings, wood foundations, or other *approved* structural systems which shall be of sufficient design to accommodate all loads and to transmit the resulting loads to the soil within the limitations as determined from the character of the soil. Footings shall be supported on undisturbed natural soils or engineered fill and shall not bear on frozen soil. Footings shall extend below the frost line, which is a minimum of 42 inches below finished grade. One story wood or metal framed garages or sheds not used for human occupancy not over 1500 square feet, and eave height of 10 feet or less may have a floating slab foundation.

Prescriptive minimum sizes for concrete and masonry footings shall be as set forth in Table R403.1 and Figure R403.1(1). The local standard residential footing is 8" thick and 16" wide.

TABLE R403.1
MINIMUM WIDTH OF CONCRETE, PRECAST OR MASONRY FOOTINGS (inches)*

	LOAD-BEARING VALUE OF SOIL (psf)			
	1,500	2,000	3,000	≥ 4,000
Conventional light-frame construction				
1-story	12	12	12	12
2-story	15	12	12	12
3-story	23	17	12	12
4-inch brick veneer over light frame or 8-inch hollow concrete masonry				
1-story	12	12	12	12
2-story	21	16	12	12
3-story	32	24	16	12
8-inch solid or fully grouted masonry				
1-story	16	12	12	12
2-story	29	21	14	12
3-story	42	32	21	16

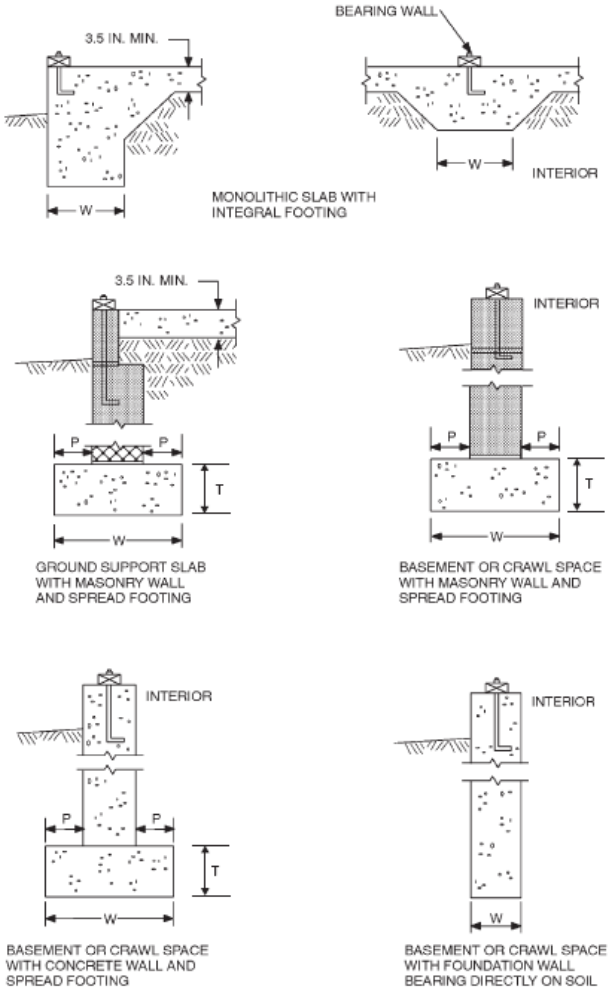

FIGURE R403.1(1)
CONCRETE AND MASONRY FOUNDATION DETAILS

Prescriptively, the footing width, W, shall be based on the load-bearing value of the soil in accordance with Table R401.4.1 on page 9 and tributary loads. Spread footings shall be at least 6 inches in thickness (T). Footing projections, (P), shall be at least 2 inches and shall not exceed the thickness of the footing. The size of footings supporting piers and columns shall also be based on the tributary load and allowable soil pressure in accordance with Table R401.4.1.

Stepped Footings: To prevent sliding and to adequately transfer loads to the soil, the code limits the slope of the bottom of footings to a maximum 1 unit vertical in 10 units horizontal. Transitions that would result in greater slopes must be achieved through stepping of the footings. The top of the foundation wall shall always be level.

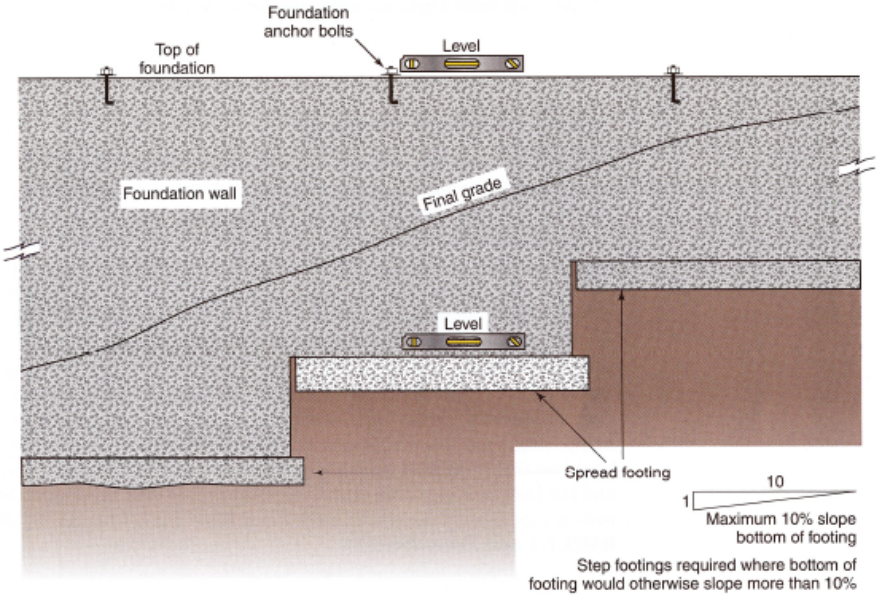

Jump Footings: Where foundation footings change elevation, forming and pouring a continuous footing can be problematic. The ACI 332 standard referenced in the 2012 IRC allows short wall sections to span between discontinous footings, within certain limits. Those limits are as follows;

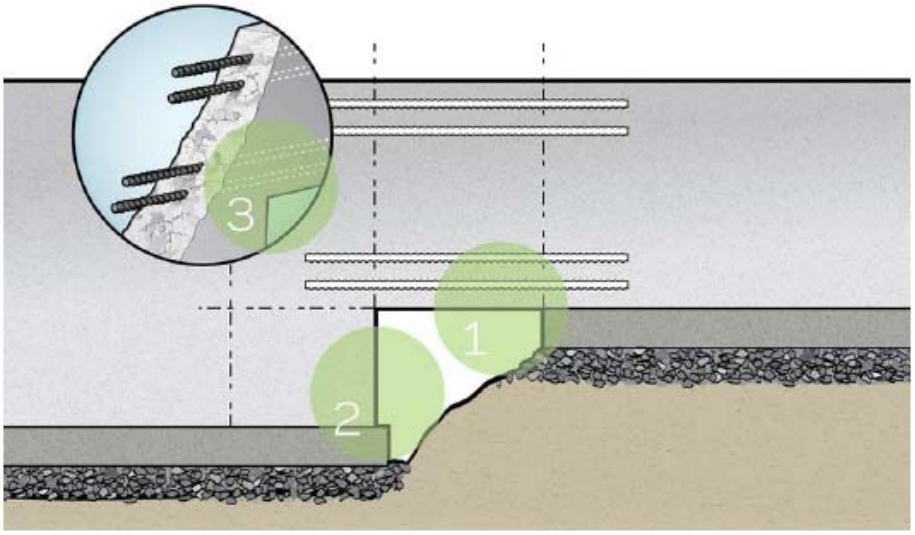

1. Span. The maximum allowable wall span between footings is 4 feet (for longer spans, consult an engineer
2. Elevation difference. The maximum difference in elevation for residential walls with discontinuous footings is 5 feet
3. Reinforcing. To enable the wall section to function as a beam, install two #4 steel reinforcing rods and the top and bottom (extending 3 feet into both walls).

Foundation and Retaining Walls: Concrete and masonry walls under the IRC shall be constructed in one of the following ways; prescriptively in accordance with section R404 of the IRC, in accordance with the details on pages 17 and 18 of this book, or engineered. Precast foundations shall always be designed by an engineer.

Concrete foundation walls designed as prescribed by IRC: Concrete foundation walls below grade that support light-frame walls or above grade shall be designed and constructed in accordance with the provisions of IRC R404, ACI 318, ACI 332 or PCA 100. When those standards are used to design concrete foundation walls, project drawings, typical details and specifications are not required to bear the seal of the architect or engineer responsible for design, unless otherwise required by the state law. While they are not required to bear the seal, however they are required to be submitted with the building permit and shall be sufficient to show all information in a manner as if they were prepared by an engineer. Its is suggested that if you choose this approach, that you acquire a copy of the 2012 IRC from www.iccsafe.org but you can also view the pages in the City Engineering office. Any design beyond the scope of section R404 is required to bear the seal of the architect or engineer responsible for design.

Masonry foundation walls designed as prescribed by IRC. Masonry foundation walls shall be designed and constructed in accordance with the provisions of section 404 of the IRC or in accordance with the provisions of TMS 402/ACI 530/ASCE 5 or NCMA TR68-A. When TMS 402/ACI 530/ASCE 5, NCMA TR68-A or the provisions of this section are used to design masonry foundation walls, project drawings, typical details and specifications are not required to bear the seal of the architect or engineer responsible for design, unless otherwise required by the state law. Concrete masonry and clay masonry foundation walls shall be constructed as set forth in Table R404.1.1(1),R404.1.1(2), R404.1.1(3) or R404.1.1(4) and shall also comply with applicable provisions of Sections R606, R607 and R608 of the 2012 IRC. Similar to the concrete foundation wall section above it is strongly recommended that the designer have their own copy of the documents mentioned above and that the plans are submitted to show all information. Any masonry foundation wall design beyond the scope of the aforementioned sections is required to bear the seal of the architect or engineer responsible for design.

Precast concrete foundation walls shall be designed in accordance with accepted engineering practice. The design and manufacture of precast concrete foundation wall panels shall comply with the materials requirements of Section R402.3 or ACI 318. The panel design drawings shall be prepared by a registered design professional in accordance with IRC Section R106.1.

Precast concrete foundation wall design drawings shall be submitted to the building official and approved prior to installation. Drawings shall include, at a minimum, the information specified below:
1. Design loading as applicable;
2. Footing design and material;
3. Concentrated loads and their points of application;
4. Soil bearing capacity;
5. Maximum allowable total uniform load;
6. Seismic design category; and
7. Basic wind speed.

Precast concrete foundation wall panels shall be identified by a certificate of inspection label issued by an approved third party inspection agency.

Poured Concrete Foundation

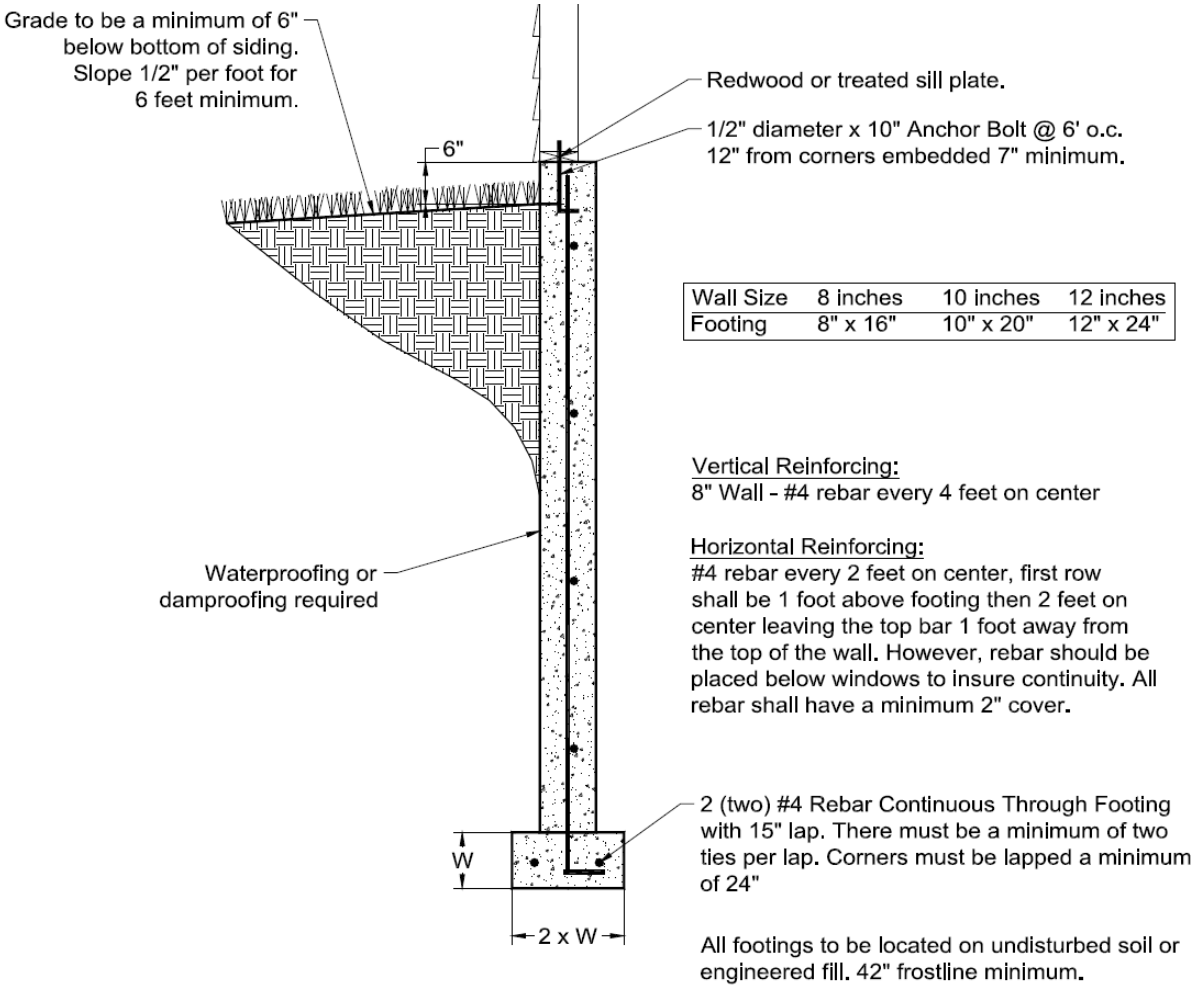

Wall Size	8 inches	10 inches	12 inches
Footing	8" x 16"	10" x 20"	12" x 24"

Vertical Reinforcing:
8" Wall - #4 rebar every 4 feet on center

Horizontal Reinforcing:
#4 rebar every 2 feet on center, first row shall be 1 foot above footing then 2 feet on center leaving the top bar 1 foot away from the top of the wall. However, rebar should be placed below windows to insure continuity. All rebar shall have a minimum 2" cover.

There shall be a minimum of 3 inches that is clear from the bottom of the footing to the rebar. Minimum No. 4 vertical rebar shall be used for positive connection between footing and foundation; vertical #4 rebar shall not be more than 4 feet on center; extend 3 inches clear of bottom of footing; have a standard hook and extend a minimum of 14 inches into the stem wall.

Block Wall Foundation

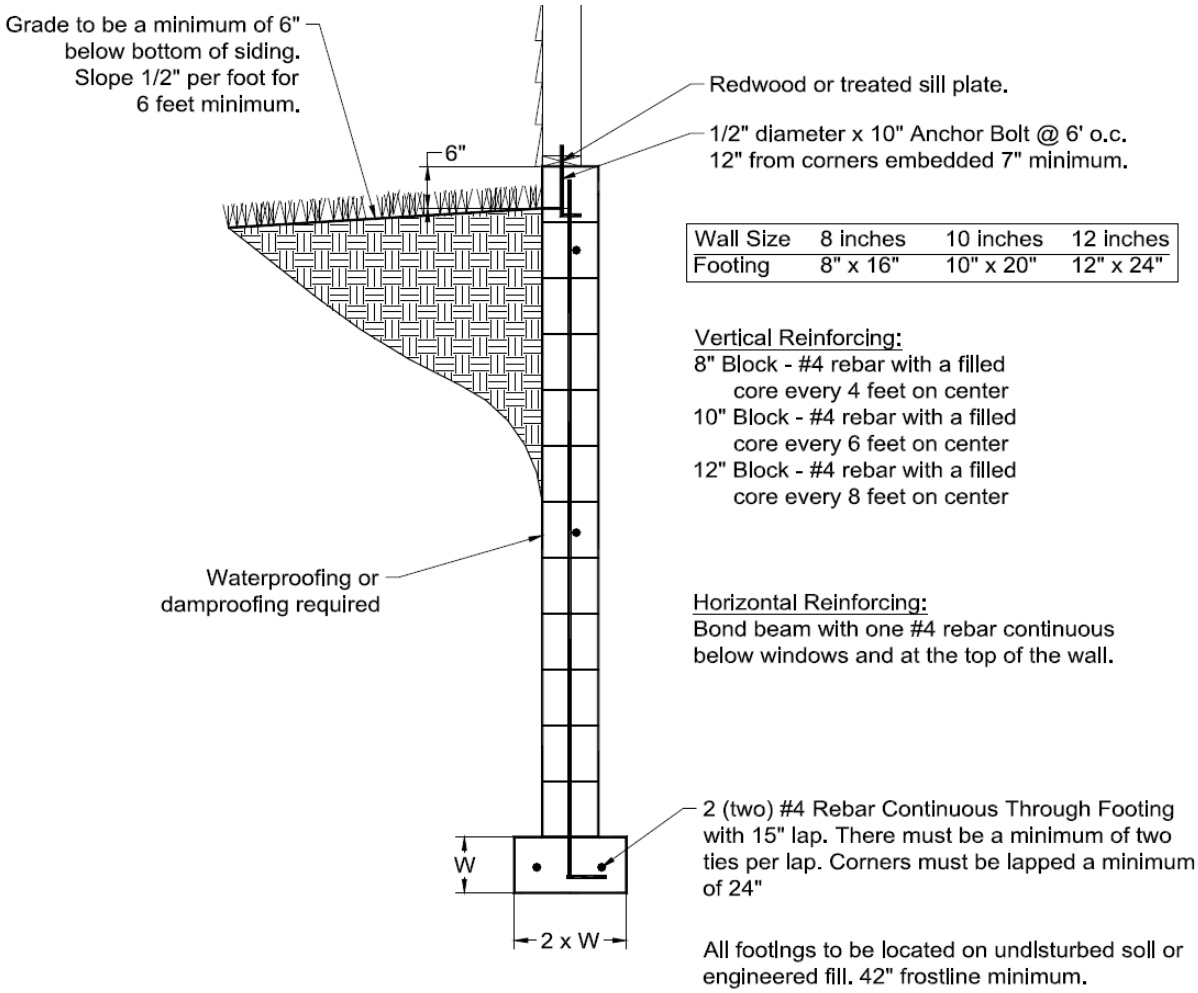

There shall be a minimum of 3 inches that is clear from the bottom of the footing to the rebar. Minimum No. 4 vertical rebar shall be used for positive connection between footing and foundation; vertical #4 rebar shall not be more than 4 feet on center; extend 3 inches clear of bottom of footing; have a standard hook and extend a minimum of 14 inches into the stem wall.

`Foundation Drainage:

Drains: Drains shall be provided around all concrete or masonry foundations that retain earth and enclose habitable or usable spaces located below grade. Drainage tiles, gravel or crushed stone drains, perforated pipe or other approved systems or materials shall be installed at or below the area to be protected and shall discharge by gravity or mechanical means into an approved drainage system. Gravel or crushed stone drains shall extend at least 1 foot beyond the outside edge of the footing and 6 inches above the top of the footing and be covered with an approved filter membrane material. The top of open joints of drain tiles shall be protected with strips of building paper. Perforated drains shall be surrounded with an approved filter membrane or the filter membrane shall cover the washed gravel or crushed rock covering the drain. Drainage tiles or perforated pipe shall be placed on a minimum of 2 inches of washed gravel or crushed rock at least one sieve size larger than the tile joint opening or perforation and covered with not less than 6 inches of the same material.

Basement slab: A porous layer of gravel, crushed stone or coarse sand shall be placed to a minimum thickness of 4 inches under the *basement* floor. Provision shall be made for automatic draining of this layer and the gravel or crushed stone wall footings. A 6-mil-thick polyethylene vapor retarder shall be applied over the porous layer with the basement floor constructed over the polyethylene.

Height above finished grade: To prevent any moisture intrusion from above finished grade, concrete and masonry walls must extend above finished grade a minimum of 6 inches.

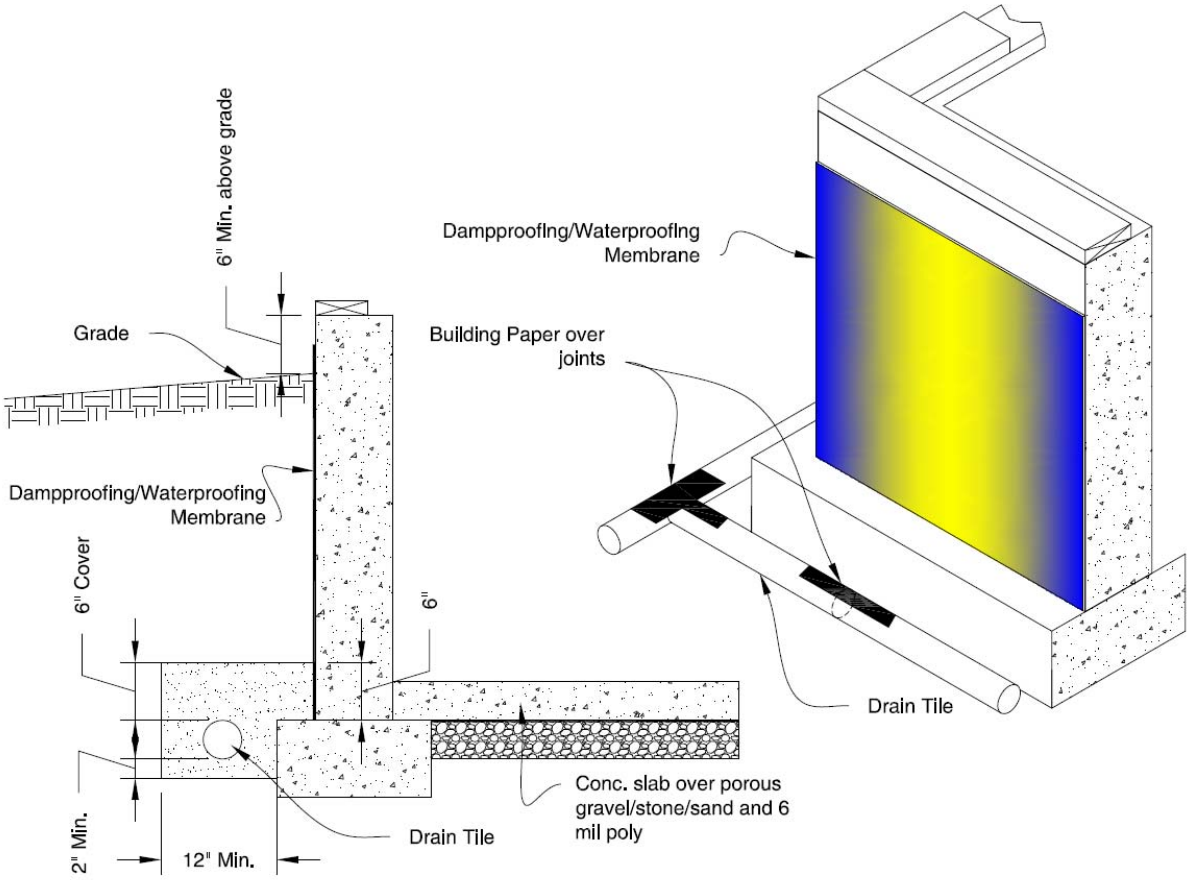

Foundation Waterproofing and Dampproofing:

Dampproofing - Except where high water table would necessitate a foundation to be waterproofed, foundation walls that retain earth and enclose interior spaces and floors below grade shall be dampproofed from the top of the footing to the finished grade. Masonry walls shall have not less than 3/8 inch portland cement parging applied to the exterior of the wall. The parging shall be dampproofed in accordance with one of the following:

1. Bituminous coating.
2. Three pounds per square yard of acrylic modified cement.
3. One-eighth inch coat of surface-bonding cement complying with ASTM C 887.
4. Any material permitted for waterproofing (8 items from list below)
5. Other *approved* methods or materials.

Exception: Parging of unit masonry walls is not required where a material is *approved* for direct application to the masonry. Concrete walls shall be dampproofed by applying any one of the above listed dampproofing materials or any one of the waterproofing materials (again, listed below) to the exterior of the wall.

Waterproofing: In areas where a high water table or other severe soil-water conditions are known to exist, exterior foundation walls that retain earth and enclose interior spaces and floors below grade shall be waterproofed from the top of the footing to the finished grade. Walls shall be waterproofed in accordance with one of the following:

1. Two-ply hot-mopped felts.
2. Fifty-five-pound (25 kg) roll roofing.
3. Six-mil (0.15 mm) polyvinyl chloride.
4. Six-mil (0.15 mm) polyethylene.
5. Forty-mil (1 mm) polymer-modified asphalt.
6. Sixty-mil (1.5 mm) flexible polymer cement.
7. One-eighth-inch (3 mm) cement-based, fiber-reinforced, waterproof coating.
8. Sixty-mil (0.22 mm) solvent-free liquid-applied synthetic rubber.

Exception: Organic-solvent-based products such as hydrocarbons, chlorinated hydrocarbons, ketones and esters shall not be used for ICF walls with expanded polystyrene form material. Use of plastic roofing cements, acrylic coatings, latex coatings, mortars and pargings to seal ICF walls is permitted. Cold-setting asphalt or hot asphalt shall conform to type C of ASTM D 449. Hot asphalt shall be applied at a temperature of less than 200°F (93°C). All joints in membrane waterproofing shall be lapped and sealed with an adhesive compatible with the membrane.

Foundation Anchorage: Anchorage to foundation is a critical part of the load path to resist lateral and uplift forces acting on the framing system of the building. The IRC prescribes anchor bolt criteria for connecting the sill plate to the foundation which is illustrated below. A nut and washer shall be tightened on each anchor bolt. There shall be a minimum of two bolts per plate section with one bolt located not more than 12 inches or less than seven bolt diameters from each end of the plate section. Sill plates and sole plates shall be protected against decay and termites.

Other methods such as foundation straps may be installed according to the manufacturers' instructions and in a way to provide equivalent anchorage. It should be noted that such alternatives typically require closer spacing then for embedded anchor bolts. ICC-ES reports or other supporting documentation shall be submitted with the building permit and/or be on site during inspections to assure compliance.

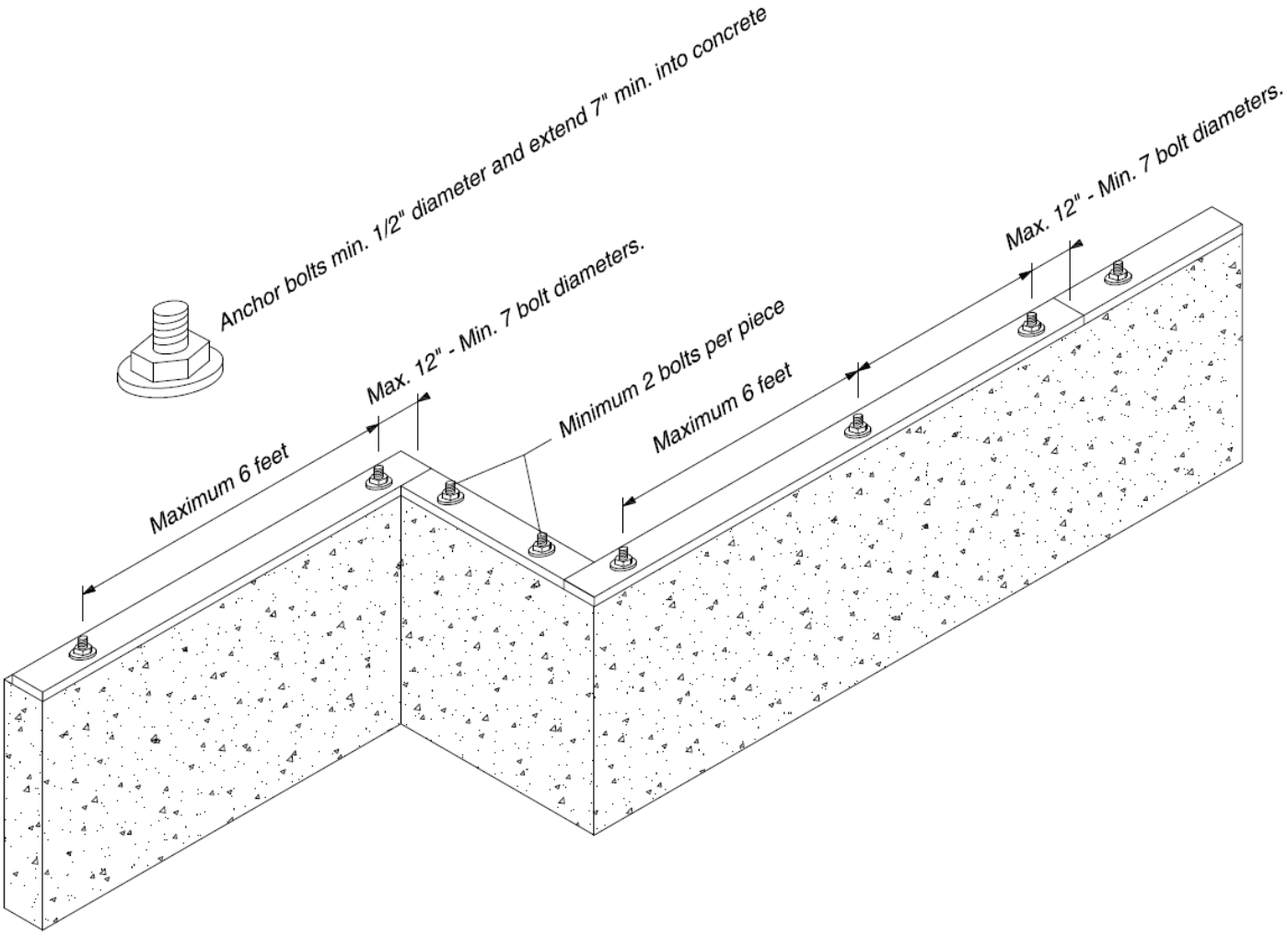

Underfloor Space: Significant amounts of condensation can accumulate in enclosed crawl spaces, causing decay and other damage to the structure so the IRC requires them to be vented. Codes stipulate openings through the foundation/exterior walls in the prescribed size and location to circulate air and dispel condensation. Another option that code permits is a crawl space without foundation openings when equipped with mechanical exhaust ventilation or connection to the conditioned air supply of the dwelling. In this case you must by code insulate the exterior walls and install a vapor barrier over the ground that is sealed to the enclosing foundation wall. Access to under floor spaces must be at least 18 inches by 24 inches but may be reduced to not less than 16 inches by 24 inches when access occurs through a perimeter wall.

The minimum net area of ventilation openings shall not be less than 1 square foot for each 150 square feet of under-floor space area, unless the ground surface is covered by a Class 1 vapor retarder material. When a Class 1 vapor retarder material is used, the minimum net area of ventilation openings shall not be less than 1 square foot for each 1,500 square feet of under-floor space area. One such ventilating opening shall be within 3 feet of each corner of the building.

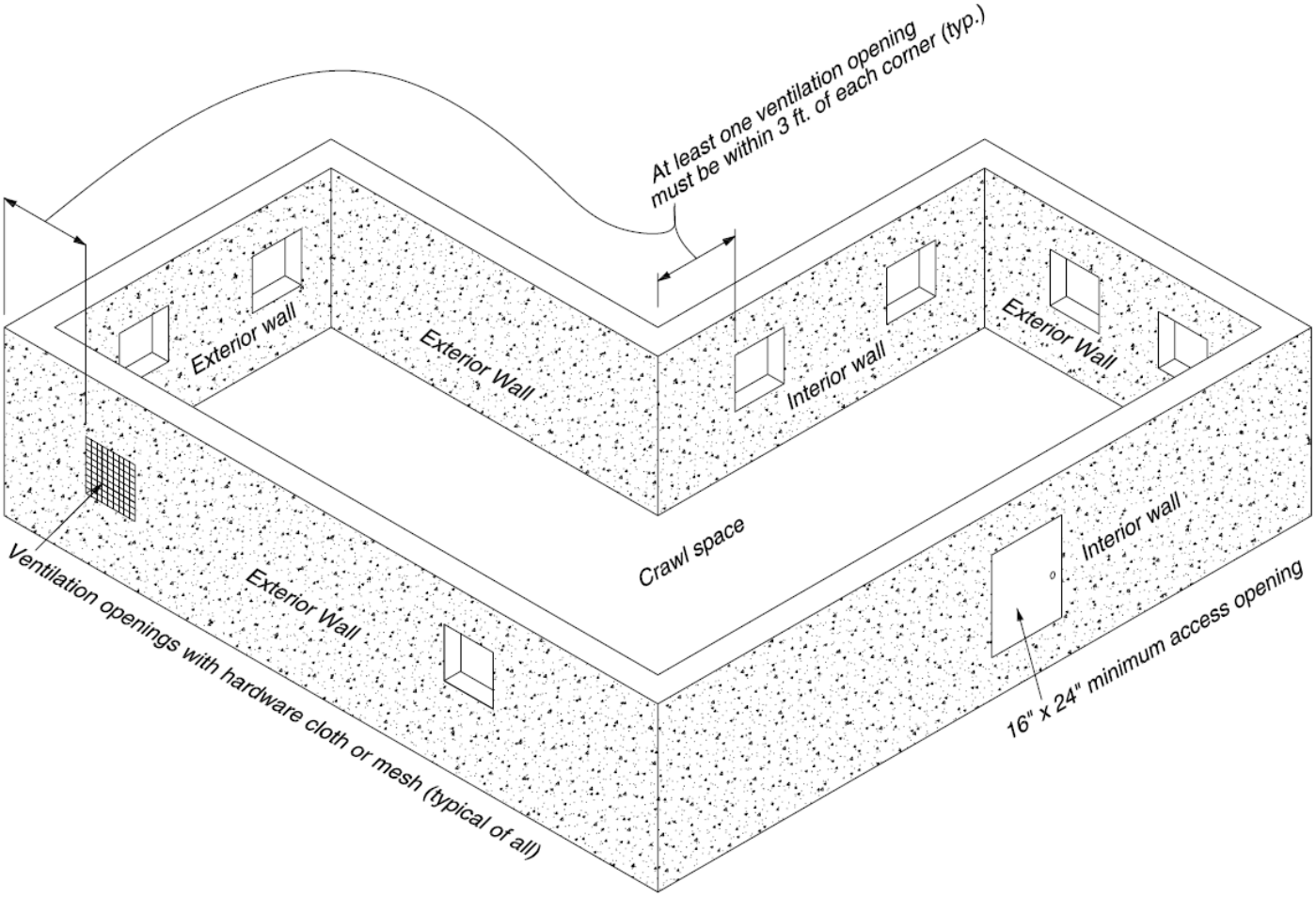

*More information on next page

Openings for under-floor ventilation. The minimum net area of ventilation openings shall not be less than 1 square foot for each 150 square feet of under-floor area. One ventilation opening shall be within 3 feet of each corner of the building. Ventilation openings shall be covered for their height and width with any of the following materials provided that the least dimension of the covering shall not exceed 1/4 inch (6.4 mm):
1. Perforated sheet metal plates not less than 0.070 inch thick.
2. Expanded sheet metal plates not less than 0.047 inch thick.
3. Cast-iron grill or grating.
4. Extruded load-bearing brick vents.
5. Hardware cloth of 0.035 inch (0.89 mm) wire or heavier.
6. Corrosion-resistant wire mesh, with the least dimension being 1/8 inch thick.
Exception: The total area of ventilation openings shall be permitted to be reduced to 1/1,500 of the under-floor area where the ground surface is covered with an *approved* Class I vapor retarder material and the required openings are placed to provide cross ventilation of the space. The installation of operable louvers shall not be prohibited.

Unvented crawl space. Ventilation openings in under-floor spaces shall not be required where:
1. Exposed earth is covered with a continuous Class I vapor retarder. Joints of the vapor retarder shall overlap by 6 inches and shall be sealed or taped. The edges of the vapor retarder shall extend at least 6 inches up the stem wall and shall be attached and sealed to the stem wall or insulation; and
2. One of the following is provided for the under-floor space:
2.1. Continuously operated mechanical exhaust ventilation at a rate equal to 1 cubic foot per minute for each 50 square feet of crawlspace floor area, including an air pathway to the common area (such as a duct or transfer grille), and insulated perimeter walls.
2.2. *Conditioned air* supply sized to deliver at a rate equal to 1 cubic foot per minute for each 50 square feet of under-floor area, including a return air pathway to the common area (such as a duct or transfer grille), and perimeter walls insulated.
2.3. Plenum in existing structures complying with the mechanical code, if under-floor space is used as a plenum.

Wood Floor Framing

General Requirements: Floor construction shall be capable of accommodating all loads and transmitting the loads to the supporting structural elements. Load-bearing dimension lumber for joists, beams, and girders shall be identified by a grade mark of a lumber grading or inspection agency that has been approved by an accreditation body.

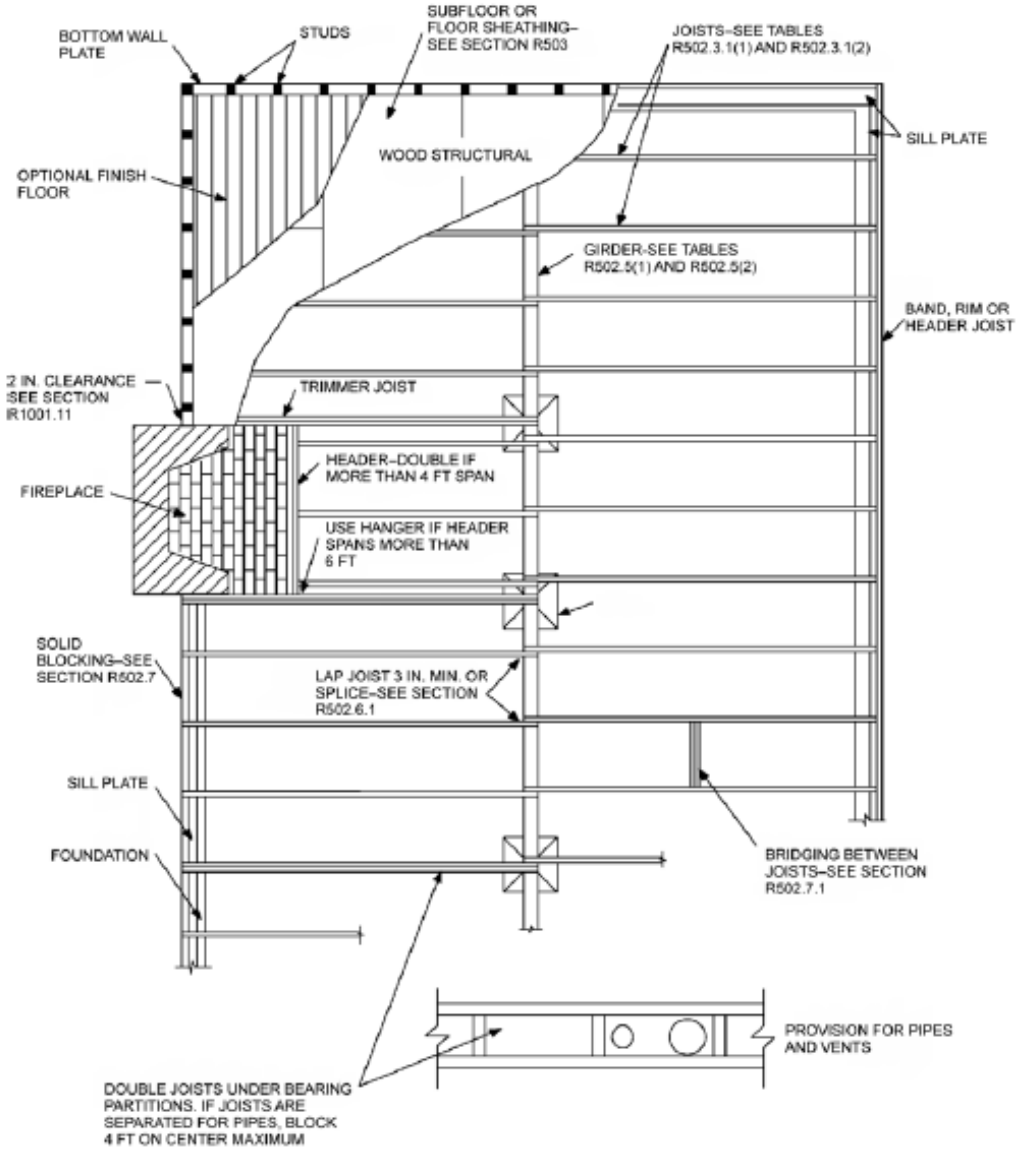

1 inch = 25.4 mm, 1 foot = 304.8 mm.

FIGURE R502.2
FLOOR CONSTRUCTION

2012 INTERNATIONAL RESIDENTIAL CODE®

Allowable joist spans. Spans for floor joists shall be in accordance with Table R502.3.1(2) below. For other grades and species and for other loading conditions, refer to the AF&PA Span Tables for Joists and Rafters at http://www.awc.org/pdf/STJR_2005.pdf

TABLE R502.3.1(2)
FLOOR JOIST SPANS FOR COMMON LUMBER SPECIES
(Residential living areas, live load = 40 psf, L/Δ = 360)[b]

JOIST SPACING (Inches)	SPECIES AND GRADE		DEAD LOAD = 10 psf				DEAD LOAD = 20 psf			
			2 × 6	2 × 8	2 × 10	2 × 12	2 × 6	2 × 8	2 × 10	2 × 12
			Maximum floor joist spans							
			(ft - in.)	(ft - in.)	(ft - in.)	(ft - in.)	(ft - in.)	(ft - in.)	(ft - in.)	(ft - in.)
12	Douglas fir-larch	SS	11-4	15-0	19-1	23-3	11-4	15-0	19-1	23-3
	Douglas fir-larch	#1	10-11	14-5	18-5	22-0	10-11	14-2	17-4	20-1
	Douglas fir-larch	#2	10-9	14-2	17-9	20-7	10-6	13-3	16-3	18-10
	Douglas fir-larch	#3	8-8	11-0	13-5	15-7	7-11	10-0	12-3	14-3
	Hem-fir	SS	10-9	14-2	18-0	21-11	10-9	14-2	18-0	21-11
	Hem-fir	#1	10-6	13-10	17-8	21-6	10-6	13-10	16-11	19-7
	Hem-fir	#2	10-0	13-2	16-10	20-4	10-0	13-1	16-0	18-6
	Hem-fir	#3	8-8	11-0	13-5	15-7	7-11	10-0	12-3	14-3
	Southern pine	SS	11-2	14-8	18-9	22-10	11-2	14-8	18-9	22-10
	Southern pine	#1	10-11	14-5	18-5	22-5	10-11	14-5	18-5	22-5
	Southern pine	#2	10-9	14-2	18-0	21-9	10-9	14-2	16-11	19-10
	Southern pine	#3	9-4	11-11	14-0	16-8	8-6	10-10	12-10	15-3
	Spruce-pine-fir	SS	10-6	13-10	17-8	21-6	10-6	13-10	17-8	21-6
	Spruce-pine-fir	#1	10-3	13-6	17-3	20-7	10-3	13-3	16-3	18-10
	Spruce-pine-fir	#2	10-3	13-6	17-3	20-7	10-3	13-3	16-3	18-10
	Spruce-pine-fir	#3	8-8	11-0	13-5	15-7	7-11	10-0	12-3	14-3
16	Douglas fir-larch	SS	10-4	13-7	17-4	21-1	10-4	13-7	17-4	21-0
	Douglas fir-larch	#1	9-11	13-1	16-5	19-1	9-8	12-4	15-0	17-5
	Douglas fir-larch	#2	9-9	12-7	15-5	17-10	9-1	11-6	14-1	16-3
	Douglas fir-larch	#3	7-6	9-6	11-8	13-6	6-10	8-8	10-7	12-4
16	Hem-fir	SS	9-9	12-10	16-5	19-11	9-9	12-10	16-5	19-11
	Hem-fir	#1	9-6	12-7	16-0	18-7	9-6	12-0	14-8	17-0
	Hem-fir	#2	9-1	12-0	15-2	17-7	8-11	11-4	13-10	16-1
	Hem-fir	#3	7-6	9-6	11-8	13-6	6-10	8-8	10-7	12-4
	Southern pine	SS	10-2	13-4	17-0	20-9	10-2	13-4	17-0	20-9
	Southern pine	#1	9-11	13-1	16-9	20-4	9-11	13-1	16-4	19-6
	Southern pine	#2	9-9	12-10	16-1	18-10	9-6	12-4	14-8	17-2
	Southern pine	#3	8-1	10-3	12-2	14-6	7-4	9-5	11-1	13-2
	Spruce-pine-fir	SS	9-6	12-7	16-0	19-6	9-6	12-7	16-0	19-6
	Spruce-pine-fir	#1	9-4	12-3	15-5	17-10	9-1	11-6	14-1	16-3
	Spruce-pine-fir	#2	9-4	12-3	15-5	17-10	9-1	11-6	14-1	16-3
	Spruce-pine-fir	#3	7-6	9-6	11-8	13-6	6-10	8-8	10-7	12-4

(continued)

TABLE R502.3.1(2)—continued
FLOOR JOIST SPANS FOR COMMON LUMBER SPECIES
(Residential living areas, live load = 40 psf, L/Δ = 360)[b]

JOIST SPACING (inches)	SPECIES AND GRADE		DEAD LOAD = 10 psf				DEAD LOAD = 20 psf			
			2 × 6	2 × 8	2 × 10	2 × 12	2 × 6	2 × 8	2 × 10	2 × 12
			Maximum floor joist spans							
			(ft - in.)	(ft - in.)	(ft - in.)	(ft - in.)	(ft - in.)	(ft - in.)	(ft - in.)	(ft - in.)
19.2	Douglas fir-larch	SS	9-8	12-10	16-4	19-10	9-8	12-10	16-4	19-2
	Douglas fir-larch	#1	9-4	12-4	15-0	17-5	8-10	11-3	13-8	15-11
	Douglas fir-larch	#2	9-1	11-6	14-1	16-3	8-3	10-6	12-10	14-10
	Douglas fir-larch	#3	6-10	8-8	10-7	12-4	6-3	7-11	9-8	11-3
	Hem-fir	SS	9-2	12-1	15-5	18-9	9-2	12-1	15-5	18-9
	Hem-fir	#1	9-0	11-10	14-8	17-0	8-8	10-11	13-4	15-6
	Hem-fir	#2	8-7	11-3	13-10	16-1	8-2	10-4	12-8	14-8
	Hem-fir	#3	6-10	8-8	10-7	12-4	6-3	7-11	9-8	11-3
	Southern pine	SS	9-6	12-7	16-0	19-6	9-6	12-7	16-0	19-6
	Southern pine	#1	9-4	12-4	15-9	19-2	9-4	12-4	14-11	17-9
	Southern pine	#2	9-2	12-1	14-8	17-2	8-8	11-3	13-5	15-8
	Southern pine	#3	7-4	9-5	11-1	13-2	6-9	8-7	10-1	12-1
	Spruce-pine-fir	SS	9-0	11-10	15-1	18-4	9-0	11-10	15-1	17-9
	Spruce-pine-fir	#	8-9	11-6	14-1	16-3	8-3	10-6	12-10	14-10
	Spruce-pine-fir	#2	8-9	11-6	14-1	16-3	8-3	10-6	12-10	14-10
	Spruce-pine-fir	#3	6-10	8-8	10-7	12-4	6-3	7-11	9-8	11-3
24	Douglas fir-larch	SS	9-0	11-11	15-2	18-5	9-0	11-11	14-9	17-1
	Douglas fir-larch	#1	8-8	11-0	13-5	15-7	7-11	10-0	12-3	14-3
	Douglas fir-larch	#2	8-1	10-3	12-7	14-7	7-5	9-5	11-6	13-4
	Douglas fir-larch	#3	6-2	7-9	9-6	11-0	5-7	7-1	8-8	10-1
	Hem-fir	SS	8-6	11-3	14-4	17-5	8-6	11-3	14-4	16-10*
	Hem-fir	#1	8-4	10-9	13-1	15-2	7-9	9-9	11-11	13-10
	Hem-fir	#2	7-11	10-2	12-5	14-4	7-4	9-3	11-4	13-1
	Hem-fir	#3	6-2	7-9	9-6	11-0	5-7	7-1	8-8	10-1
	Southern pine	SS	8-10	11-8	14-11	18-1	8-10	11-8	14-11	18-1
	Southern pine	#1	8-8	11-5	14-7	17-5	8-8	11-3	13-4	15-11
	Southern pine	#2	8-6	11-0	13-1	15-5	7-9	10-0	12-0	14-0
	Southern pine	#3	6-7	8-5	9-11	11-10	6-0	7-8	9-1	10-9
	Spruce-pine-fir	SS	8-4	11-0	14-0	17-0	8-4	11-0	13-8	15-11
	Spruce-pine-fir	#1	8-1	10-3	12-7	14-7	7-5	9-5	11-6	13-4
	Spruce-pine-fir	#2	8-1	10-3	12-7	14-7	7-5	9-5	11-6	13-4
	Spruce-pine-fir	#3	6-2	7-9	9-6	11-0	5-7	7-1	8-8	10-1

For SI: 1 inch = 25.4 mm, 1 foot = 304.8 mm, 1 pound per square foot = 0.0479 kPa.

Note: Check sources for availability of lumber in lengths greater than 20 feet.

a. End bearing length shall be increased to 2 inches.

b. Dead load limits for townhouses in Seismic Design Category C and all structures in Seismic Design Categories D_0, D_1, and D_2 shall be determined in accordance with Section R301.2.2.2.1.

Bearing. The ends of each joist, beam or girder shall have not less than 1-1/2 inches of bearing on wood or metal and not less than 3 inches on masonry or concrete except where supported on a 1-inch by 4-inch ribbon strip and nailed to the adjacent stud or by the use of approved joist hangers. The bearing on masonry or concrete can be direct, or a sill plate of 2-inch-minimum nominal thickness.

Joists framing from opposite sides over a bearing support shall lap a minimum of 3 inches and shall be nailed together with a minimum three 10d face nails. A wood or metal splice with strength equal to or greater than that provided by the nailed lap is permitted..

Joists framing into the side of a wood girder or beam shall be supported by *approved* framing anchors or on ledger strips not less than nominal 2 inches by 2 inches.

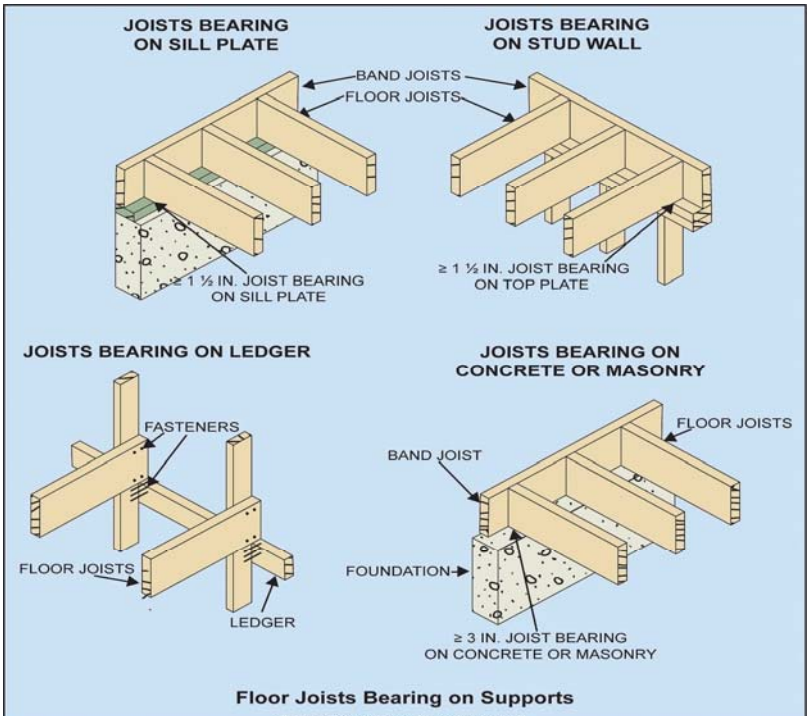

Floor Joists Bearing on Supports

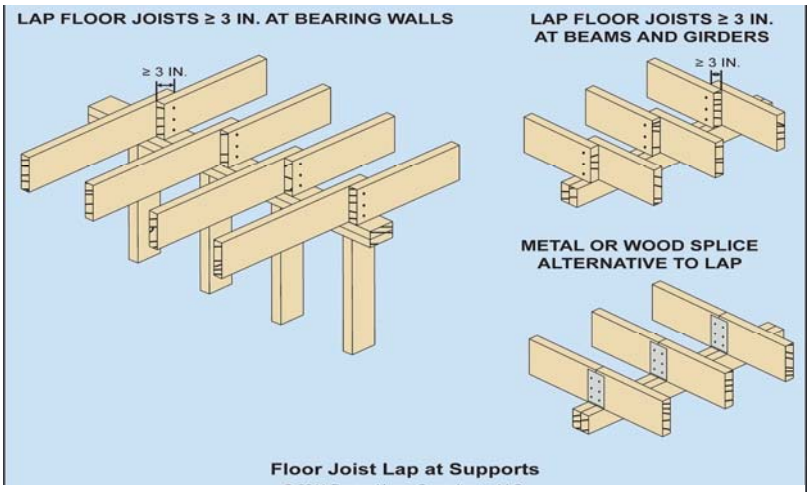

Floor Joist Lap at Supports

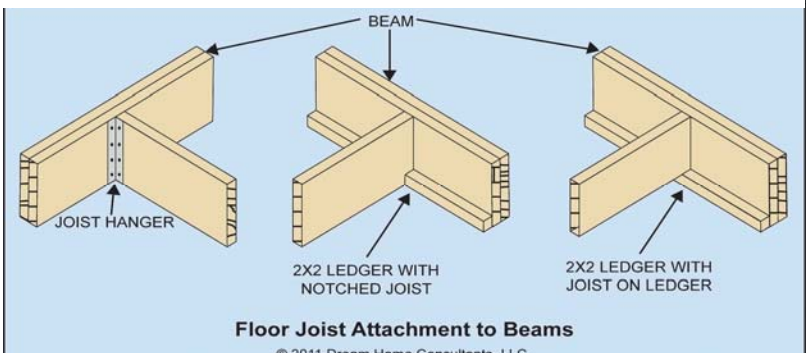

Floor Joist Attachment to Beams

Joists under bearing partitions. Joists under parallel bearing partitions shall be of adequate size to support the load. Double joists, sized to adequately support the load, that are separated to permit the installation of piping or vents shall be full depth solid blocked with lumber not less than 2 inches in nominal thickness spaced not more than 4 feet on center. Bearing partitions perpendicular to joists shall not be offset from supporting girders, walls or partitions more than the joist depth unless such joists are of sufficient size to carry the additional load.

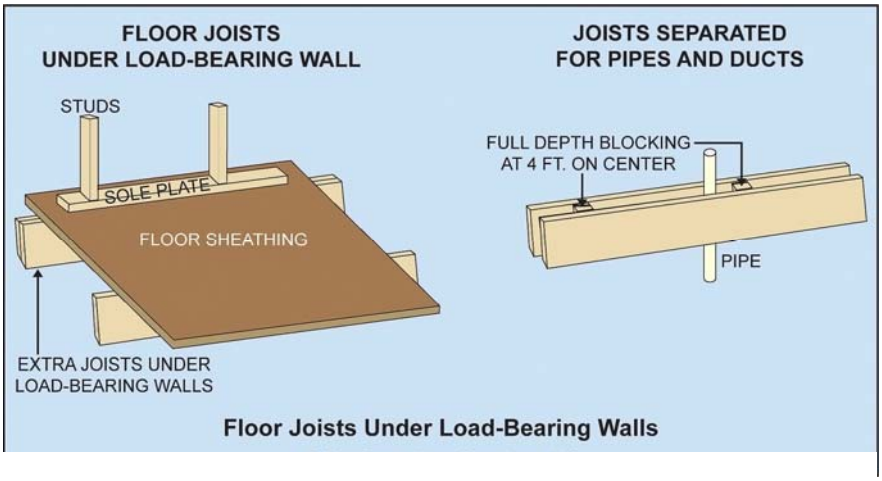

Floor Joists Under Load-Bearing Walls

Lateral restraint at supports. Joists shall be supported laterally at the ends by full-depth solid blocking not less than 2 inches nominal in thickness; or by attachment to a full-depth header, band or rim joist, or to an adjoining stud or shall be otherwise provided with lateral support to prevent rotation. Exception: Trusses, structural composite lumber, structural glued-laminated members and I-joists shall be supported laterally as required by the manufacturer's recommendations.

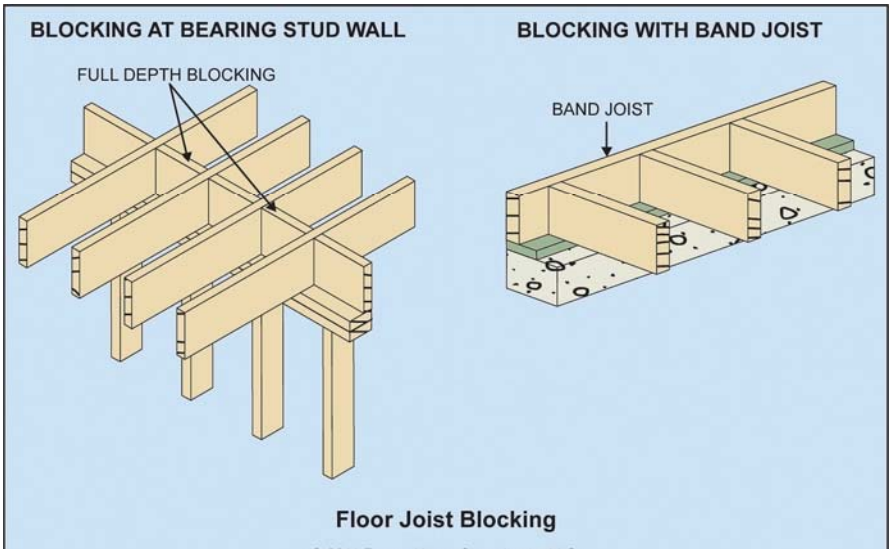

Floor Joist Blocking

Bridging. Joists exceeding a nominal 2 inches by 12 inches shall be supported laterally by solid blocking, diagonal bridging (wood or metal),or a continuous 1 inch by 3 inch strip nailed across the bottom of joists perpendicular to joists at intervals not exceeding 8 feet. Exception: Trusses, structural composite lumber, structural glued-laminated members and I-joists shall be supported laterally as required by the manufacturer's recommendations.

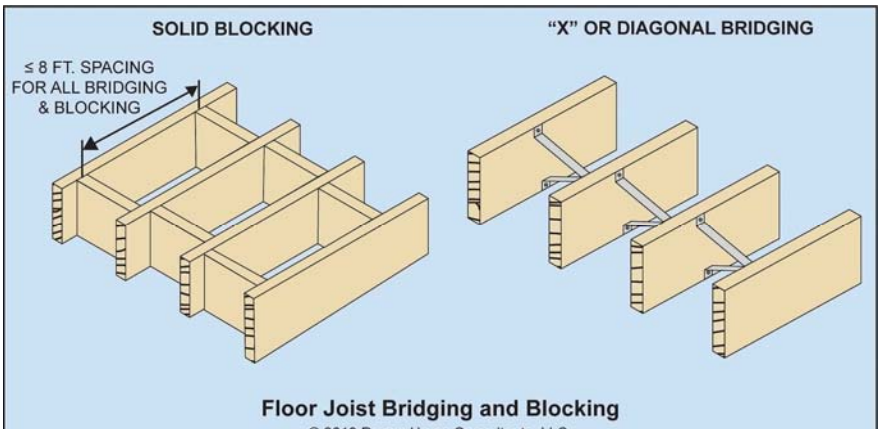

Floor Joist Bridging and Blocking

Allowable girder spans. The allowable spans of girders fabricated of dimension lumber shall not exceed the values set forth in Tables R502.5(1) and R502.5(2).

TABLE R502.5(1)
GIRDER SPANS[a] AND HEADER SPANS[a] FOR EXTERIOR BEARING WALLS
(Maximum spans for Douglas fir-larch, hem-fir, southern pine and spruce-pine-fir[b] and required number of jack studs)

GIRDERS AND HEADERS SUPPORTING	SIZE	GROUND SNOW LOAD (psf)[a]																	
		30						50						70					
		Building width[c] (feet)																	
		20		28		36		20		28		36		20		28		36	
		Span	NJ[d]	Span	NJ[d]	Span	NJ[d]	Span	NJ[d]	Span	NJ[d]	Span	NJ[d]	Span	NJ[d]	Span	NJ[d]	Span	NJ[d]
Roof and ceiling	2-2 × 4	3-6	1	3-2	1	2-10	1	3-2	1	2-9	1	2-6	1	2-10	1	2-6	1	2-3	1
	2-2 × 6	5-5	1	4-8	1	4-2	1	4-8	1	4-1	1	3-8	2	4-2	1	3-8	2	3-3	2
	2-2 × 8	6-10	1	5-11	2	5-4	2	5-11	2	5-2	2	4-7	2	5-4	2	4-7	2	4-1	2
	2-2 × 10	8-5	2	7-3	2	6-6	2	7-3	2	6-3	2	5-7	2	6-6	2	5-7	2	5-0	2
	2-2 × 12	9-9	2	8-5	2	7-6	2	8-5	2	7-3	2	6-6	2	7-6	2	6-6	2	5-10	3
	3-2 × 8	8-4	1	7-5	1	6-8	1	7-5	1	6-5	2	5-9	2	6-8	1	5-9	2	5-2	2
	3-2 × 10	10-6	1	9-1	2	8-2	2	9-1	2	7-10	2	7-0	2	8-2	2	7-0	2	6-4	2
	3-2 × 12	12-2	2	10-7	2	9-5	2	10-7	2	9-2	2	8-2	2	9-5	2	8-2	2	7-4	2
	4-2 × 8	9-2	1	8-4	1	7-8	1	8-4	1	7-5	1	6-8	1	7-8	1	6-8	1	5-11	2
	4-2 × 10	11-8	1	10-6	1	9-5	2	10-6	1	9-1	2	8-2	2	9-5	2	8-2	2	7-3	2
	4-2 × 12	14-1	1	12-2	2	10-11	2	12-2	2	10-7	2	9-5	2	10-11	2	9-5	2	8-5	2
Roof, ceiling and one center-bearing floor	2-2 × 4	3-1	1	2-9	1	2-5	1	2-9	1	2-5	1	2-2	1	2-7	1	2-3	1	2-0	1
	2-2 × 6	4-6	1	4-0	1	3-7	2	4-1	1	3-7	2	3-3	2	3-9	2	3-3	2	2-11	2
	2-2 × 8	5-9	2	5-0	2	4-6	2	5-2	2	4-6	2	4-1	2	4-9	2	4-2	2	3-9	2
	2-2 × 10	7-0	2	6-2	2	5-6	2	6-4	2	5-6	2	5-0	2	5-9	2	5-1	2	4-7	3
	2-2 × 12	8-1	2	7-1	2	6-5	2	7-4	2	6-5	2	5-9	3	6-8	2	5-10	3	5-3	3
	3-2 × 8	7-2	1	6-3	2	5-8	2	6-5	2	5-8	2	5-1	2	5-11	2	5-2	2	4-8	2
	3-2 × 10	8-9	2	7-8	2	6-11	2	7-11	2	6-11	2	6-3	2	7-3	2	6-4	2	5-8	2
	3-2 × 12	10-2	2	8-11	2	8-0	2	9-2	2	8-0	2	7-3	2	8-5	2	7-4	2	6-7	2
	4-2 × 8	8-1	1	7-3	1	6-7	1	7-5	1	6-6	1	5-11	2	6-10	1	6-0	2	5-5	2
	4-2 × 10	10-1	1	8-10	2	8-0	2	9-1	2	8-0	2	7-2	2	8-4	2	7-4	2	6-7	2
	4-2 × 12	11-9	2	10-3	2	9-3	2	10-7	2	9-3	2	8-4	2	9-8	2	8-6	2	7-7	2
Roof, ceiling and one clear span floor	2-2 × 4	2-8	1	2-4	1	2-1	1	2-7	1	2-3	1	2-0	1	2-5	1	2-1	1	1-10	1
	2-2 × 6	3-11	1	3-5	2	3-0	2	3-10	2	3-4	2	3-0	2	3-6	2	3-1	2	2-9	2
	2-2 × 8	5-0	2	4-4	2	3-10	2	4-10	2	4-2	2	3-9	2	4-6	2	3-11	2	3-6	2
	2-2 × 10	6-1	2	5-3	2	4-8	2	5-11	2	5-1	2	4-7	3	5-6	2	4-9	2	4-3	3
	2-2 × 12	7-1	2	6-1	3	5-5	3	6-10	2	5-11	3	5-4	3	6-4	2	5-6	3	5-0	3
	3-2 × 8	6-3	2	5-5	2	4-10	2	6-1	2	5-3	2	4-8	2	5-7	2	4-11	2	4-5	2
	3-2 × 10	7-7	2	6-7	2	5-11	2	7-5	2	6-5	2	5-9	2	6-10	2	6-0	2	5-4	2
	3-2 × 12	8-10	2	7-8	2	6-10	2	8-7	2	7-5	2	6-8	2	7-11	2	6-11	2	6-3	2
	4-2 × 8	7-2	1	6-3	2	5-7	2	7-0	1	6-1	2	5-5	2	6-6	1	5-8	2	5-1	2
	4-2 × 10	8-9	2	7-7	2	6-10	2	8-7	2	7-5	2	6-7	2	7-11	2	6-11	2	6-2	2
	4-2 × 12	10-2	2	8-10	2	7-11	2	9-11	2	8-7	2	7-8	2	9-2	2	8-0	2	7-2	2
Roof, ceiling and two center-bearing floors	2-2 × 4	2-7	1	2-3	1	2-0	1	2-6	1	2-2	1	1-11	1	2-4	1	2-0	1	1-9	1
	2-2 × 6	3-9	2	3-3	2	2-11	2	3-8	2	3-2	2	2-10	2	3-5	2	3-0	2	2-8	2
	2-2 × 8	4-9	2	4-2	2	3-9	2	4-7	2	4-0	2	3-8	2	4-4	2	3-9	2	3-5	2
	2-2 × 10	5-9	2	5-1	2	4-7	3	5-8	2	4-11	2	4-5	3	5-3	2	4-7	3	4-2	3
	2-2 × 12	6-8	2	5-10	3	5-3	3	6-6	2	5-9	3	5-2	3	6-1	3	5-4	3	4-10	3
	3-2 × 8	5-11	2	5-2	2	4-8	2	5-9	2	5-1	2	4-7	2	5-5	2	4-9	2	4-3	2
	3-2 × 10	7-3	2	6-4	2	5-8	2	7-1	2	6-2	2	5-7	2	6-7	2	5-9	2	5-3	2
	3-2 × 12	8-5	2	7-4	2	6-7	2	8-2	2	7-2	2	6-5	3	7-8	2	6-9	2	6-1	3
	4-2 × 8	6-10	1	6-0	2	5-5	2	6-8	1	5-10	2	5-3	2	6-3	2	5-6	2	4-11	2
	4-2 × 10	8-4	2	7-4	2	6-7	2	8-2	2	7-2	2	6-5	2	7-7	2	6-8	2	6-0	2
	4-2 × 12	9-8	2	8-6	2	7-8	2	9-5	2	8-3	2	7-5	2	8-10	2	7-9	2	7-0	2
Roof, ceiling, and two clear span floors	2-2 × 4	2-1	1	1-8	1	1-6	2	2-0	1	1-8	1	1-5	2	2-0	1	1-8	1	1-5	2
	2-2 × 6	3-1	2	2-8	2	2-4	2	3-0	2	2-7	2	2-3	2	2-11	2	2-7	2	2-3	2
	2-2 × 8	3-10	2	3-4	2	3-0	3	3-10	2	3-4	2	2-11	3	3-9	2	3-3	2	2-11	3

(continued)

TABLE R502.5(1)—continued
GIRDER SPANS[a] AND HEADER SPANS[a] FOR EXTERIOR BEARING WALLS
(Maximum spans for Douglas fir-larch, hem-fir, southern pine and spruce-pine-fir[b] and required number of jack studs)

GIRDERS AND HEADERS SUPPORTING	SIZE	GROUND SNOW LOAD (psf)[e]																	
		30						50						70					
		Building width[c] (feet)																	
		20		28		36		20		28		36		20		28		36	
		Span	NJ[d]	Span	NJ[d]	Span	NJ[d]	Span	NJ[d]	Span	NJ[d]	Span	NJ[d]	Span	NJ[d]	Span	NJ[d]	Span	NJ[d]
Roof, ceiling, and two clear span floors	2-2 × 10	4-9	2	4-1	3	3-8	3	4-8	2	4-0	3	3-7	3	4-7	3	4-0	3	3-6	3
	2-2 × 12	5-6	3	4-9	3	4-3	3	5-5	3	4-8	3	4-2	3	5-4	3	4-7	3	4-1	4
	3-2 × 8	4-10	2	4-2	2	3-9	2	4-9	2	4-1	2	3-8	2	4-8	2	4-1	2	3-8	2
	3-2 × 10	5-11	2	5-1	2	4-7	3	5-10	2	5-0	2	4-6	3	5-9	2	4-11	2	4-5	3
	3-2 × 12	6-10	2	5-11	3	5-4	3	6-9	2	5-10	3	5-3	3	6-8	2	5-9	3	5-2	3
	4-2 × 8	5-7	2	4-10	2	4-4	2	5-6	2	4-9	2	4-3	2	5-5	2	4-8	2	4-2	2
	4-2 × 10	6-10	2	5-11	2	5-3	2	6-9	2	5-10	2	5-2	2	6-7	2	5-9	2	5-1	2
	4-2 × 12	7-11	2	6-10	2	6-2	3	7-9	2	6-9	2	6-0	3	7-8	2	6-8	2	5-11	3

For SI: 1 inch = 25.4 mm, 1 pound per square foot = 0.0479 kPa.
a. Spans are given in feet and inches.
b. Tabulated values assume #2 grade lumber.
c. Building width is measured perpendicular to the ridge. For widths between those shown, spans are permitted to be interpolated.
d. NJ - Number of jack studs required to support each end. Where the number of required jack studs equals one, the header is permitted to be supported by an approved framing anchor attached to the full-height wall stud and to the header.
e. Use 30 psf ground snow load for cases in which ground snow load is less than 30 psf and the roof live load is equal to or less than 20 psf.

TABLE R502.5(2)
GIRDER SPANS[a] AND HEADER SPANS[a] FOR INTERIOR BEARING WALLS
(Maximum spans for Douglas fir-larch, hem-fir, southern pine and spruce-pine-fir[b] and required number of jack studs)

HEADERS AND GIRDERS SUPPORTING	SIZE	BUILDING Width[c] (feet)					
		20		28		36	
		Span	NJ[d]	Span	NJ[d]	Span	NJ[d]
One floor only	2-2 × 4	3-1	1	2-8	1	2-5	1
	2-2 × 6	4-6	1	3-11	1	3-6	1
	2-2 × 8	5-9	1	5-0	2	4-5	2
	2-2 × 10	7-0	2	6-1	2	5-5	2
	2-2 × 12	8-1	2	7-0	2	6-3	2
	3-2 × 8	7-2	1	6-3	1	5-7	2
	3-2 × 10	8-9	1	7-7	2	6-9	2
	3-2 × 12	10-2	2	8-10	2	7-10	2
	4-2 × 8	9-0	1	7-8	1	6-9	1
	4-2 × 10	10-1	1	8-9	1	7-10	2
	4-2 × 12	11-9	1	10-2	2	9-1	2
Two floors	2-2 × 4	2-2	1	1-10	1	1-7	1
	2-2 × 6	3-2	2	2-9	2	2-5	2
	2-2 × 8	4-1	2	3-6	2	3-2	2
	2-2 × 10	4-11	2	4-3	2	3-10	3
	2-2 × 12	5-9	2	5-0	3	4-5	3
	3-2 × 8	5-1	2	4-5	2	3-11	2
	3-2 × 10	6-2	2	5-4	2	4-10	2
	3-2 × 12	7-2	2	6-3	2	5-7	3
	4-2 × 8	6-1	1	5-3	2	4-8	2
	4-2 × 10	7-2	2	6-2	2	5-6	2
	4-2 × 12	8-4	2	7-2	2	6-5	2

For SI: 1 inch = 25.4 mm, 1 foot = 304.8 mm.
a. Spans are given in feet and inches.
b. Tabulated values assume #2 grade lumber.
c. Building width is measured perpendicular to the ridge. For widths between those shown, spans are permitted to be interpolated.
d. NJ - Number of jack studs required to support each end. Where the number of required jack studs equals one, the header is permitted to be supported by an approved framing anchor attached to the full-height wall stud and to the header.

Cutting, drilling and notching. Structural floor members shall not be cut, bored or notched in excess of the limitations specified in this section. See Figure R502.8.

Sawn lumber. Notches in solid lumber joists, rafters and beams shall not exceed one-sixth of the depth of the member, shall not be longer than one-third of the depth of the member and shall not be located in the middle one-third of the span. Notches at the ends of the member shall not exceed one-fourth the depth of the member. The tension side of members 4 inches (102 mm) or greater in nominal thickness shall not be notched except at the ends of the members. The diameter of holes bored or cut into members shall not exceed one-third the depth of the member. Holes shall not be closer than 2 inches (51 mm) to the top or bottom of the member, or to any other hole located in the member. Where the member is also notched, the hole shall not be closer than 2 inches (51 mm) to the notch.

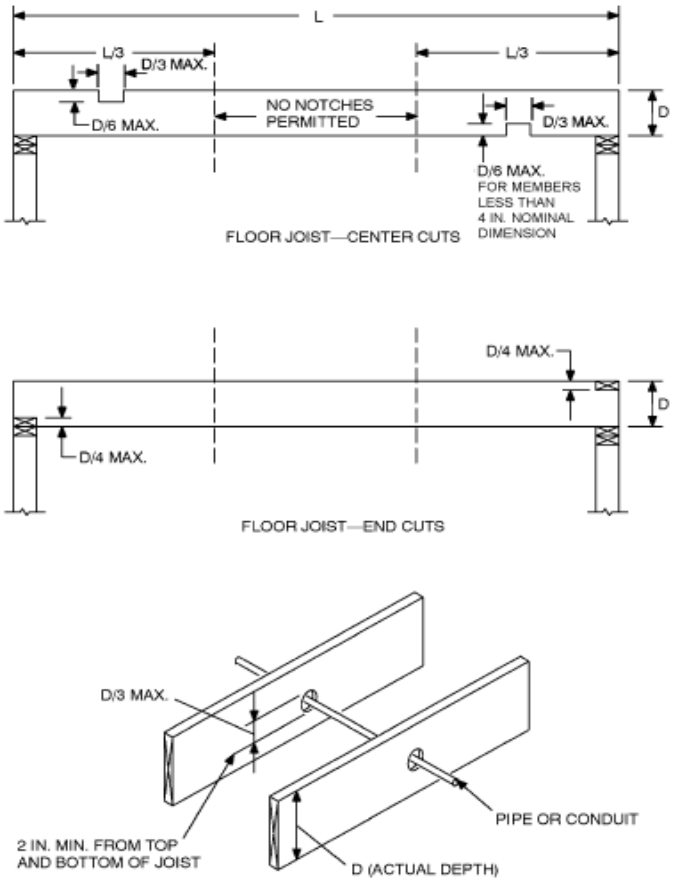

For SI: 1 inch = 25.4 mm.

FIGURE R502.8
CUTTING, NOTCHING AND DRILLING

2012 INTERNATIONAL RESIDENTIAL CODE®

Engineered wood products. Cuts, notches and holes bored in structural composite lumber, structural glue-laminated members or I-joists are prohibited except where permitted by the manufacturer's recommendations or where the effects of such alterations are specifically considered in the design of the member by a *registered design professional*.

Wood trusses: Wood trusses shall be designed in accordance with *approved* engineering practice. The design and manufacture of metal plate connected wood trusses shall comply with ANSI/TPI 1. The truss design drawings shall be prepared by a registered professional engineer.

Bracing. Trusses shall be braced to prevent rotation and provide lateral stability in accordance with the requirements specified in the construction documents for the building and on the individual truss design drawings. In the absence of specific bracing requirements, trusses shall be braced in accordance with accepted industry practices, such as, the SBCA *Building Component Safety Information (BCSI) Guide to Good Practice for Handling, Installing & Bracing of Metal Plate Connected Wood Trusses*.
http://support.sbcindustry.com/docs/06_BCSI_booklet_FINAL.pdf

Alterations to trusses. Truss members and components shall not be cut, notched, spliced or otherwise altered in any way without the approval of a registered design professional. Alterations resulting in the addition of load (e.g., HVAC equipment, water heater, etc.), exceeding the design load for the truss, shall not be permitted without verification that the truss is capable of supporting the additional loading.

Truss design drawings. Truss design drawings shall be submitted to the building official and approved prior to installation. Truss design drawings shall be provided with the shipment of trusses delivered to the job site. Truss design drawings shall include, at a minimum, the information specified below:

1. Slope or depth, span and spacing.
2. Location of all joints.
3. Required bearing widths.
4. Design loads as applicable:
4.1. Top chord live load;
4.2. Top chord dead load;
4.3. Bottom chord live load;
4.4. Bottom chord dead load;
4.5. Concentrated loads and their points of application; and
4.6. Controlling wind and earthquake loads.
5. Adjustments to lumber and joint connector design values for conditions of use.
6. Each reaction force and direction.
7. Joint connector type and description, e.g., size, thickness or gauge, and the dimensioned location of each joint connector except where symmetrically located relative to the joint interface.
8. Lumber size, species and grade for each member.
9. Connection requirements for:
9.1. Truss-to-girder-truss;
9.2. Truss ply-to-ply; and
9.3. Field splices.
10. Calculated deflection ratio and/or maximum description for live and total load.
11. Maximum axial compression forces in the truss members to enable the building designer to design the size, connections and anchorage of the permanent continuous lateral bracing. Forces shall be shown on the truss drawing or on supplemental documents.
12. Required permanent truss member bracing location.

In combustible construction where there is usable space both above and below the concealed space of a floor/ceiling assembly, draftstops shall be installed so that the area of the concealed space does not exceed 1,000 square feet. Draftstopping shall divide the concealed space into approximately equal areas.

Wall Construction

<u>The wall construction section of the IRC is over 200 pages long, so this next section is condensed as much as possible to include the methods most often seen utilized in Madison and answer frequently asked questions. If you have any questions please contact the building official or acquire your own copy of the IRC.</u>

General Requirements: Wall construction shall be capable of accommodating all loads imposed and of transmitting the resulting loads to the supporting structural elements. Load-bearing dimension lumber for studs, plates and headers shall be identified by a grade mark of a lumber grading or inspection agency. In lieu of a grade mark, a certification of inspection issued by a lumber grading or inspection agency meeting the requirements shall be accepted. Studs shall be continuous from support at the sole plate to a support at the top plate to resist loads perpendicular to the wall. The support shall be a foundation or floor, ceiling or roof diaphragm or shall be designed in accordance with accepted engineering practice.

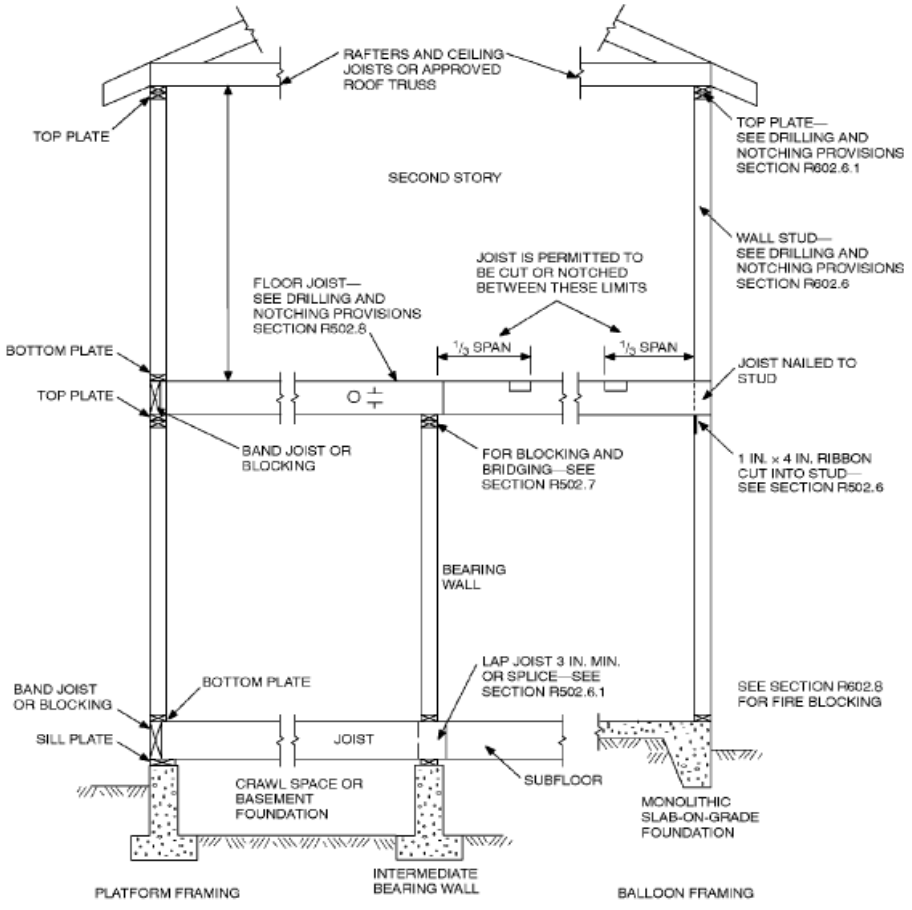

SI: 1 inch = 25.4 mm, 1 foot = 304.8 mm.

FIGURE R602.3(1)
TYPICAL WALL, FLOOR AND ROOF FRAMING

2012 INTERNATIONAL RESIDENTIAL CODE®

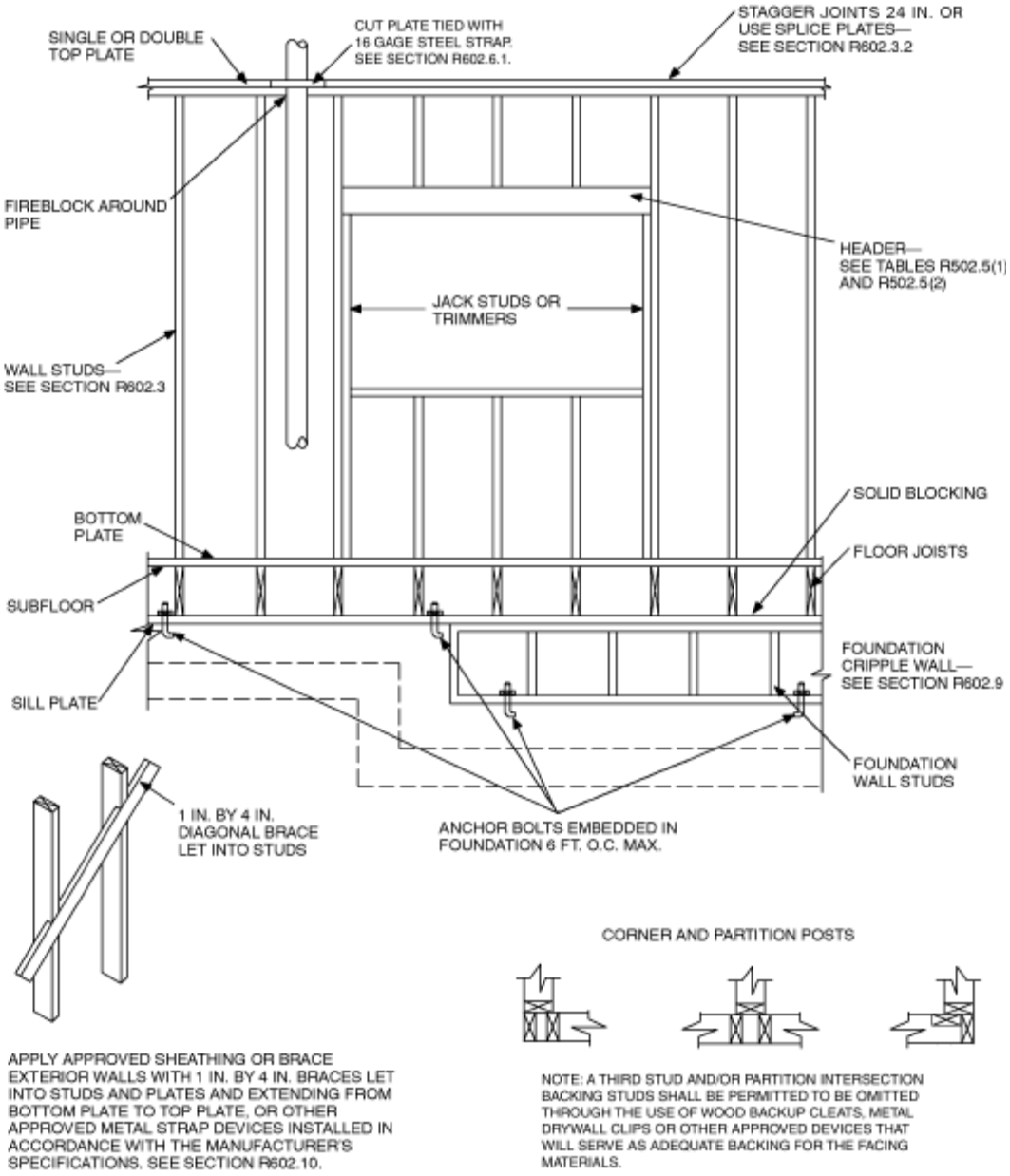

For SI: 1 inch = 25.4 mm, 1 foot = 304.8 mm.

FIGURE R602.3(2)
FRAMING DETAILS

Fastening: Components of exterior walls shall be fastened in accordance with Tables R602.3(1) through R602.3(4). Wall sheathing shall be fastened directly to framing members.

TABLE R602.3(1)
FASTENER SCHEDULE FOR STRUCTURAL MEMBERS

ITEM	DESCRIPTION OF BUILDING ELEMENTS	NUMBER AND TYPE OF FASTENER[a, b, c]	SPACING OF FASTENERS
		Roof	
1	Blocking between joists or rafters to top plate, toe nail	3-8d ($2^1/_2$" × 0.113")	—
2	Ceiling joists to plate, toe nail	3-8d ($2^1/_2$" × 0.113")	—
3	Ceiling joists not attached to parallel rafter, laps over partitions, face nail	3-10d	—
4	Collar tie to rafter, face nail or $1^1/_4$" × 20 gage ridge strap	3-10d (3" × 0.128")	—
5	Rafter or roof truss to plate, toe nail	3-16d box nails ($3^1/_2$" × 0.135") or 3-10d common nails (3" × 0.148")	2 toe nails on one side and 1 toe nail on opposite side of each rafter or truss[j]
6	Roof rafters to ridge, valley or hip rafters: toe nail face nail	4-16d ($3^1/_2$" × 0.135") 3-16d ($3^1/_2$" × 0.135")	—
		Wall	
7	Built-up studs-face nail	10d (3" × 0.128")	24" o.c.
8	Abutting studs at intersecting wall corners, face nail	16d (3 ½" x 0.135")	12" o.c.
9	Built-up header, two pieces with $^1/_2$" spacer	16d ($3^1/_2$" × 0.135")	16" o.c. along each edge
10	Continued header, two pieces	16d ($3^1/_2$" × 0.135")	16" o.c. along each edge
11	Continuous header to stud, toe nail	4-8d ($2^1/_2$" × 0.113")	—
12	Double studs, face nail	10d (3" × 0.128")	24" o.c.
13	Double top plates, face nail	10d (3" × 0.128")	24" o.c.
14	Double top plates, minimum 24-inch offset of end joints, face nail in lapped area	8-16d ($3^1/_2$" × 0.135")	—
15	Sole plate to joist or blocking, face nail	16d ($3^1/_2$" × 0.135")	16" o.c.
16	Sole plate to joist or blocking at braced wall panels	3-16d ($3^1/_2$" × 0.135")	16" o.c.
17	Stud to sole plate, toe nail	3-8d ($2^1/_2$" × 0.113") or 2-16d ($3^1/_2$" × 0.135")	— —
18	Top or sole plate to stud, end nail	2-16d ($3^1/_2$" × 0.135")	—
19	Top plates, laps at corners and intersections, face nail	2-10d (3" × 0.128")	—
20	1" brace to each stud and plate, face nail	2-8d ($2^1/_2$" × 0.113") 2 staples $1^3/_4$"	— —
21	1" × 6" sheathing to each bearing, face nail	2-8d ($2^1/_2$" × 0.113") 2 staples $1^3/_4$"	— —
22	1" × 8" sheathing to each bearing, face nail	2-8d ($2^1/_2$" × 0.113") 3 staples $1^3/_4$"	— —
23	Wider than 1" × 8" sheathing to each bearing, face nail	3-8d ($2^1/_2$" × 0.113") 4 staples $1^3/_4$"	— —
		Floor	
24	Joist to sill or girder, toe nail	3-8d ($2^1/_2$" × 0.113")	—
25	Rim joist to top plate, toe nail (roof applications also)	8d ($2^1/_2$" × 0.113")	6" o.c.
26	Rim joist or blocking to sill plate, toe nail	8d (2 ½" × 0.113")	6" o.c.
27	1" × 6" subfloor or less to each joist, face nail	2-8d ($2^1/_2$" × 0.113") 2 staples $1^3/_4$"	— —
28	2" subfloor to joist or girder, blind and face nail	2-16d ($3^1/_2$" × 0.135")	—
29	2" planks (plank & beam - floor & roof)	2-16d ($3^1/_2$" × 0.135")	at each bearing
30	Built-up girders and beams, 2-inch lumber layers	10d (3" × 0.128")	Nail each layer as follows: 32" o.c. at top and bottom and staggered. Two nails at ends and at each splice.
31	Ledger strip supporting joists or rafters	3-16d ($3^1/_2$" × 0.135")	At each joist or rafter

(continued)

TABLE R602.3(1)—continued
FASTENER SCHEDULE FOR STRUCTURAL MEMBERS

ITEM	DESCRIPTION OF BUILDING MATERIALS	DESCRIPTION OF FASTENER[b, c, e]	SPACING OF FASTENERS	
			Edges (Inches)[i]	Intermediate supports[c, e] (Inches)
	Wood structural panels, subfloor, roof and interior wall sheathing to framing and particleboard wall sheathing to framing			
32	$^3/_8$" - $^1/_2$"	6d common (2" × 0.113") nail (subfloor wall)[j] 8d common ($2^1/_2$" × 0.131") nail (roof)[f]	6	12[g]
33	$^{19}/_{32}$" - 1"	8d common nail ($2^1/_2$" × 0.131")	6	12[g]
34	$1^1/_8$" - $1^1/_4$"	10d common (3" × 0.148") nail or 8d ($2^1/_2$" × 0.131") deformed nail	6	12
	Other wall sheathing[h]			
35	$^1/_2$" structural cellulosic fiberboard sheathing	$^1/_2$" galvanized roofing nail, $^7/_{16}$" crown or 1" crown staple 16 ga., $1^1/_4$" long	3	6
36	$^{25}/_{32}$" structural cellulosic fiberboard sheathing	$1^3/_4$" galvanized roofing nail, $^7/_{16}$" crown or 1" crown staple 16 ga., $1^1/_2$" long	3	6
37	$^1/_2$" gypsum sheathing[d]	$1^1/_2$" galvanized roofing nail; staple galvanized, $1^1/_2$" long; $1^1/_4$ screws, Type W or S	7	7
38	$^5/_8$" gypsum sheathing[d]	$1^3/_4$" galvanized roofing nail; staple galvanized, $1^5/_8$" long; $1^5/_8$" screws, Type W or S	7	7
	Wood structural panels, combination subfloor underlayment to framing			
39	$^3/_4$" and less	6d deformed (2" × 0.120") nail or 8d common ($2^1/_2$" × 0.131") nail	6	12
40	$^7/_8$" - 1"	8d common ($2^1/_2$" × 0.131") nail or 8d deformed ($2^1/_2$" × 0.120") nail	6	12
41	$1^1/_8$" - $1^1/_4$"	10d common (3" × 0.148") nail or 8d deformed ($2^1/_2$" × 0.120") nail	6	12

For SI: 1 inch = 25.4 mm, 1 foot = 304.8 mm, 1 mile per hour = 0.447 m/s; 1 Ksi = 6.895 MPa.

a. All nails are smooth-common, box or deformed shanks except where otherwise stated. Nails used for framing and sheathing connections shall have minimum average bending yield strengths as shown: 80 ksi for shank diameter of 0.192 inch (20d common nail), 90 ksi for shank diameters larger than 0.142 inch but not larger than 0.177 inch, and 100 ksi for shank diameters of 0.142 inch or less.

b. Staples are 16 gage wire and have a minimum $^7/_{16}$-inch on diameter crown width.

c. Nails shall be spaced at not more than 6 inches on center at all supports where spans are 48 inches or greater.

d. Four-foot by 8-foot or 4-foot by 9-foot panels shall be applied vertically.

e. Spacing of fasteners not included in this table shall be based on Table R602.3(2).

f. For regions having basic wind speed of 110 mph or greater, 8d deformed ($2^1/_2$" × 0.120) nails shall be used for attaching plywood and wood structural panel roof sheathing to framing within minimum 48-inch distance from gable end walls, if mean roof height is more than 25 feet, up to 35 feet maximum.

g. For regions having basic wind speed of 100 mph or less, nails for attaching wood structural panel roof sheathing to gable end wall framing shall be spaced 6 inches on center. When basic wind speed is greater than 100 mph, nails for attaching panel roof sheathing to intermediate supports shall be spaced 6 inches on center for minimum 48-inch distance from ridges, eaves and gable end walls; and 4 inches on center to gable end wall framing.

h. Gypsum sheathing shall conform to ASTM C 1396 and shall be installed in accordance with GA 253. Fiberboard sheathing shall conform to ASTM C 208.

i. Spacing of fasteners on floor sheathing panel edges applies to panel edges supported by framing members and required blocking and at all floor perimeters only. Spacing of fasteners on roof sheathing panel edges applies to panel edges supported by framing members and required blocking. Blocking of roof or floor sheathing panel edges perpendicular to the framing members need not be provided except as required by other provisions of this code. Floor perimeter shall be supported by framing members or solid blocking.

j. Where a rafter is fastened to an adjacent parallel ceiling joist in accordance with this schedule, provide two toe nails on one side of the rafter and toe nails from the ceiling joist to top plate in accordance with this schedule. The toe nail on the opposite side of the rafter shall not be required.

TABLE R602.3(2)
ALTERNATE ATTACHMENTS TO TABLE R602.3(1)

NOMINAL MATERIAL THICKNESS (Inches)	DESCRIPTION[a, b] OF FASTENER AND LENGTH (Inches)	SPACING[c] OF FASTENERS	
		Edges (Inches)	Intermediate supports (Inches)
Wood structural panels subfloor, roof[g] and wall sheathing to framing and particleboard wall sheathing to framing[f]			
Up to $^1/_2$	Staple 15 ga. $1^3/_4$	4	8
	0.097 - 0.099 Nail $2^1/_4$	3	6
	Staple 16 ga. $1^3/_4$	3	6
$^{19}/_{32}$ and $^5/_8$	0.113 Nail 2	3	6
	Staple 15 and 16 ga. 2	4	8
	0.097 - 0.099 Nail $2^1/_4$	4	8
$^{23}/_{32}$ and $^3/_4$	Staple 14 ga. 2	4	8
	Staple 15 ga. $1^3/_4$	3	6
	0.097 - 0.099 Nail $2^1/_4$	4	8
	Staple 16 ga. 2	4	8
1	Staple 14 ga. $2^1/_4$	4	8
	0.113 Nail $2^1/_4$	3	6
	Staple 15 ga. $2^1/_4$	4	8
	0.097 - 0.099 Nail $2^1/_2$	4	8
NOMINAL MATERIAL THICKNESS (Inches)	**DESCRIPTION[a,b] OF FASTENER AND LENGTH (Inches)**	**SPACING[c] OF FASTENERS**	
		Edges (Inches)	**Body of panel[d] (Inches)**
Floor underlayment; plywood-hardboard-particleboard[f]			
Plywood			
$^1/_4$ and $^5/_{16}$	$1^1/_4$ ring or screw shank nail-minimum $12^1/_2$ ga. (0.099 ") shank diameter	3	6
	Staple 18 ga., $^7/_8$, $^3/_{16}$ crown width	2	5
$^{11}/_{32}$, $^3/_8$, $^{15}/_{32}$, and $^1/_2$	$1^1/_4$ ring or screw shank nail-minimum $12^1/_2$ ga. (0.099 ") shank diameter	6	8[e]
$^{19}/_{32}$, $^5/_8$, $^{23}/_{32}$ and $^3/_4$	$1^1/_2$ ring or screw shank nail-minimum $12^1/_2$ ga. (0.099 ") shank diameter	6	8
	Staple 16 ga. $1^1/_2$	6	8
Hardboard[f]			
0.200	$1^1/_2$ long ring-grooved underlayment nail	6	6
	4d cement-coated sinker nail	6	6
	Staple 18 ga., $^7/_8$ long (plastic coated)	3	6
Particleboard			
$^1/_4$	4d ring-grooved underlayment nail	3	6
	Staple 18 ga., $^7/_8$ long, $^3/_{16}$ crown	3	6
$^3/_8$	6d ring-grooved underlayment nail	6	10
	Staple 16 ga., $1^1/_8$ long, $^3/_8$ crown	3	6
$^1/_2$, $^5/_8$	6d ring-grooved underlayment nail	6	10
	Staple 16 ga., $1^5/_8$ long, $^3/_8$ crown	3	6

For SI: 1 inch = 25.4 mm.

a. Nail is a general description and may be T-head, modified round head or round head.

b. Staples shall have a minimum crown width of $^7/_{16}$-inch on diameter except as noted.

c. Nails or staples shall be spaced at not more than 6 inches on center at all supports where spans are 48 inches or greater. Nails or staples shall be spaced at not more than 12 inches on center at intermediate supports for floors.

d. Fasteners shall be placed in a grid pattern throughout the body of the panel.

e. For 5-ply panels, intermediate nails shall be spaced not more than 12 inches on center each way.

f. Hardboard underlayment shall conform to CPA/ANSI A135.4

g. Specified alternate attachments for roof sheathing shall be permitted for windspeeds less than 100 mph. Fasteners attaching wood structural panel roof sheathing to gable end wall framing shall be installed using the spacing listed for panel edges.

TABLE R602.3(3)
REQUIREMENTS FOR WOOD STRUCTURAL PANEL WALL SHEATHING USED TO RESIST WIND PRESSURES[a, b, c]

MINIMUM NAIL		MINIMUM WOOD STRUCTURAL PANEL SPAN RATING	MINIMUM NOMINAL PANEL THICKNESS (Inches)	MAXIMUM WALL STUD SPACING (Inches)	PANEL NAIL SPACING		MAXIMUM WIND SPEED (mph)		
Size	Penetration (Inches)				Edges (Inches o.c.)	Field (Inches o.c.)	Wind exposure category		
							B	C	D
6d Common (2.0" × 0.113")	1.5	24/0	$^3/_8$	16	6	12	110	90	85
8d Common (2.5" × 0.131")	1.75	24/16	$^7/_{16}$	16	6	12	130	110	105
				24	6	12	110	90	85

For SI: 1 inch = 25.4 mm, 1 mile per hour = 0.447 m/s.

a. Panel strength axis parallel or perpendicular to supports. Three-ply plywood sheathing with studs spaced more than 16 inches on center shall be applied with panel strength axis perpendicular to supports.

b. Table is based on wind pressures acting toward and away from building surfaces per Section R301.2. Lateral bracing requirements shall be in accordance with Section R602.10.

c. Wood structural panels with span ratings of Wall-16 or Wall-24 shall be permitted as an alternate to panels with a 24/0 span rating. Plywood siding rated 16 o.c. or 24 o.c. shall be permitted as an alternate to panels with a 24/16 span rating. Wall-16 and Plywood siding 16 o.c. shall be used with studs spaced a maximum of 16 inches on center.

TABLE R602.3(4)
ALLOWABLE SPANS FOR PARTICLEBOARD WALL SHEATHING[a]

THICKNESS (Inch)	GRADE	STUD SPACING (Inches)	
		When siding is nailed to studs	When siding is nailed to sheathing
$^3/_8$	M-1 Exterior glue	16	—
$^1/_2$	M-2 Exterior glue	16	16

For SI: 1 inch = 25.4 mm.

a. Wall sheathing not exposed to the weather. If the panels are applied horizontally, the end joints of the panel shall be offset so that four panels corners will not meet. All panel edges must be supported. Leave a $^1/_{16}$-inch gap between panels and nail no closer than $^3/_8$ inch from panel edges.

Stud size, height and spacing: The size, height and spacing of studs shall be in accordance with Table R602.3.(5).

TABLE R602.3(5)
SIZE, HEIGHT AND SPACING OF WOOD STUDS[a]

STUD SIZE (Inches)	BEARING WALLS					NONBEARING WALLS	
	Laterally unsupported stud height[a] (feet)	Maximum spacing when supporting a roof-ceiling assembly or a habitable attic assembly, only (Inches)	Maximum spacing when supporting one floor, plus a roof-ceiling assembly or a habitable attic assembly (Inches)	Maximum spacing when supporting two floors, plus a roof-ceiling assembly or a habitable attic assembly (Inches)	Maximum spacing when supporting one floor height[a] (feet)	Laterally unsupported stud height[a] (feet)	Maximum spacing (Inches)
2 × 3[b]	—	—	—	—	—	10	16
2 × 4	10	24[c]	16[c]	—	24	14	24
3 × 4	10	24	24	16	24	14	24
2 × 5	10	24	24	—	24	16	24
2 × 6	10	24	24	16	24	20	24

For SI: 1 inch = 25.4 mm, 1 foot = 304.8 mm, 1 square foot = 0.093 m^2.

a. Listed heights are distances between points of lateral support placed perpendicular to the plane of the wall. Increases in unsupported height are permitted where justified by analysis.

b. Shall not be used in exterior walls.

c. A habitable attic assembly supported by 2 × 4 studs is limited to a roof span of 32 feet. Where the roof span exceeds 32 feet, the wall studs shall be increased to 2 × 6 or the studs shall be designed in accordance with accepted engineering practice.

Exceptions:
1. Utility grade studs shall not be spaced more than 16 inches on center, shall not support more than a roof and ceiling, and shall not exceed 8 feet in height for exterior walls and load-bearing walls or 10 feet for interior non load-bearing walls.
2. Studs more than 10 feet in height which are in accordance with Table R602.3.1. (on this and the next page of this book)

TABLE R602.3.1
MAXIMUM ALLOWABLE LENGTH OF WOOD WALL STUDS EXPOSED TO WIND SPEEDS OF 100 MPH OR LESS IN SEISMIC DESIGN CATEGORIES A, B, C, D_0, D_1 and D_2[b, c]

HEIGHT (feet)	ON-CENTER SPACING (Inches)			
	24	16	12	8
Supporting a roof only				
> 10	2 × 4	2 × 4	2 × 4	2 × 4
12	2 × 6	2 × 4	2 × 4	2 × 4
14	2 × 6	2 × 6	2 × 6	2 × 4
16	2 × 6	2 × 6	2 × 6	2 × 4
18	NA[a]	2 × 6	2 × 6	2 × 6
20	NA[a]	NA[a]	2 × 6	2 × 6
24	NA[a]	NA[a]	NA[a]	2 × 6
Supporting one floor and a roof				
> 10	2 × 6	2 × 4	2 × 4	2 × 4
12	2 × 6	2 × 6	2 × 6	2 × 4
14	2 × 6	2 × 6	2 × 6	2 × 6
16	NA[a]	2 × 6	2 × 6	2 × 6
18	NA[a]	2 × 6	2 × 6	2 × 6
20	NA[a]	NA[a]	2 × 6	2 × 6
24	NA[a]	NA[a]	NA[a]	2 × 6

(continued)

Supporting two floors and a roof				
> 10	2 × 6	2 × 6	2 × 4	2 × 4
12	2 × 6	2 × 6	2 × 6	2 × 6
14	2 × 6	2 × 6	2 × 6	2 × 6
16	NA[a]	NA[a]	2 × 6	2 × 6
18	NA[a]	NA[a]	2 × 6	2 × 6
20	NA[a]	NA[a]	NA[a]	2 × 6
22	NA[a]	NA[a]	NA[a]	NA[a]
24	NA[a]	NA[a]	NA[a]	NA[a]

For SI: 1 inch = 25.4 mm, 1 foot = 304.8 mm, 1 pound per square foot = 0.0479 kPa
1 pound per square inch = 6.895 kPa, 1 mile per hour = 0.447 m/s.

a. Design required.

b. Applicability of this table assumes the following: Snow load not exceeding 25 psf, f_b not less than 1310 psi determined by multiplying the AF&PA NDS tabular base design value by the repetitive use factor, and by the size factor for all species except southern pine, E not less than 1.6×10^6 psi, tributary dimensions for floors and roofs not exceeding 6 feet, maximum span for floors and roof not exceeding 12 feet, eaves not over 2 feet in dimension and exterior sheathing. Where the conditions are not within these parameters, design is required.

c. Utility, standard, stud and No. 3 grade lumber of any species are not permitted.

(continued)

TABLE R602.3.1—continued
MAXIMUM ALLOWABLE LENGTH OF WOOD WALL STUDS EXPOSED TO WIND SPEEDS OF 100 MPH OR LESS IN SEISMIC DESIGN CATEGORIES A, B, C, D_0, D_1 and D_2

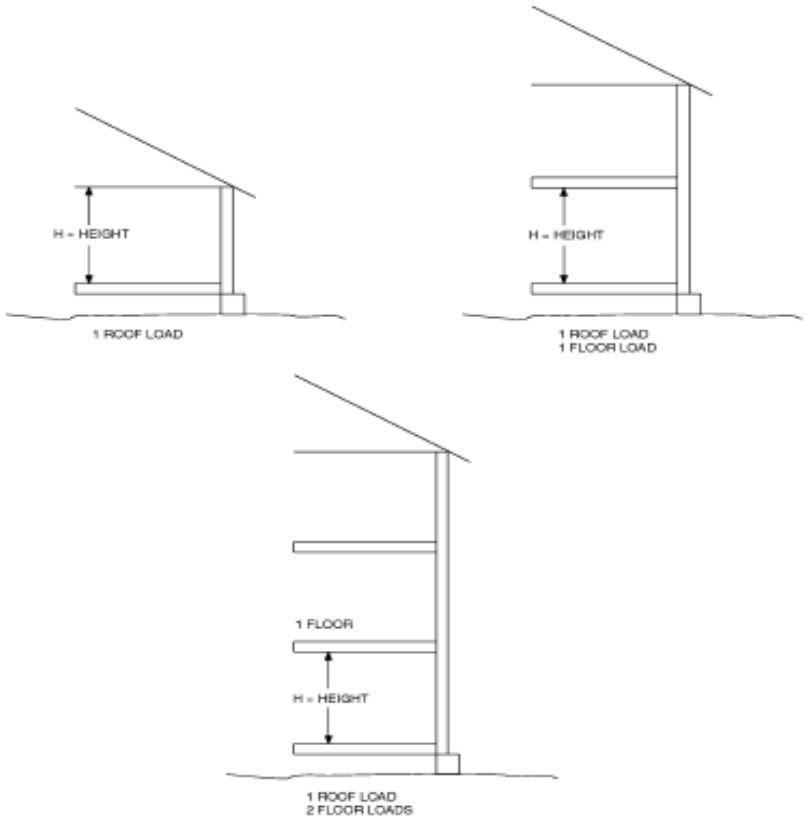

Top plate. Wood stud walls shall be capped with a double top plate installed to provide overlapping at corners and intersections with bearing partitions. End joints in top plates shall be offset at least 24 inches. Joints in plates need not occur over studs. Plates shall be not less than 2-inches nominal thickness and have a width at least equal to the width of the studs.

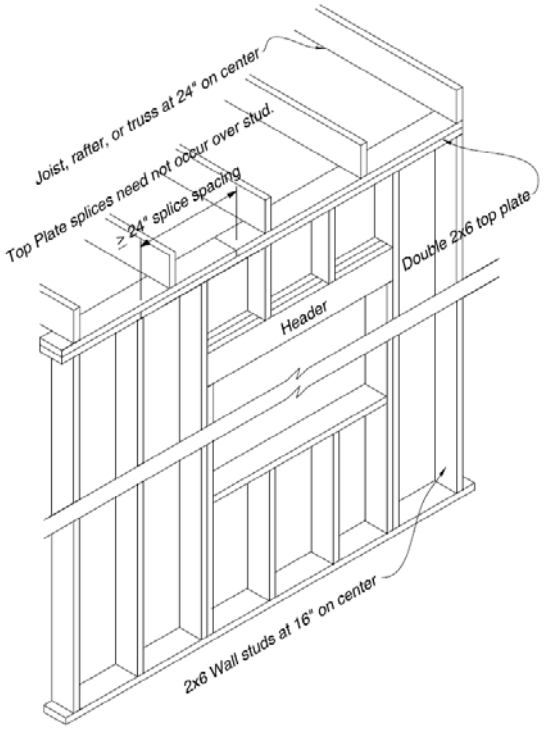

Exception: A single top plate may be installed in stud walls, provided the plate is adequately tied at joints, corners and intersecting walls by a minimum 3-inch by 6-inch by a 0.036-inch-thick galvanized steel plate that is nailed to each wall or segment of wall by six 8d nails on each side, provided the rafters or joists are centered over the studs with a tolerance of no more than 1 inch. The top plate may be omitted over lintels that are adequately tied to adjacent wall sections with steel plates or equivalent as previously described.

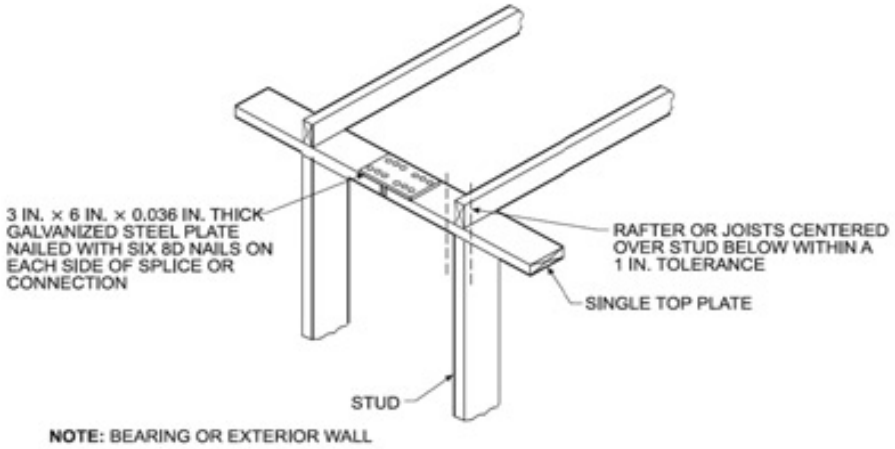

For SI: 1 inch = 25.4 mm.

Figure R602.3.2
SINGLE TOP-PLATE SPLICE

Drilling and notching of top plate. When piping or ductwork is placed in or partly in an exterior wall or interior load-bearing wall, necessitating cutting, drilling or notching of the top plate by more than 50 percent of its width, a galvanized metal tie not less than 0.054 inch thick (16 ga) and 11/2 inches wide shall be fastened across and to the plate at each side of the opening with not less than eight 10d having a minimum length of 11/2 inches at each side or equivalent. The metal tie must extend a minimum of 6 inches past the opening. See Figure R602.6.1

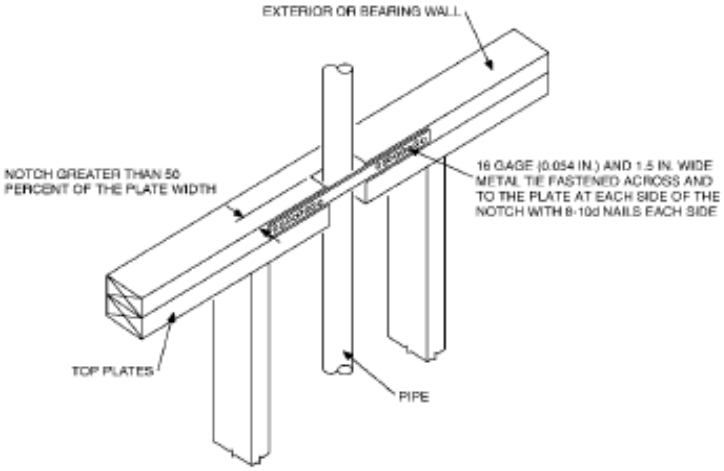

FIGURE R602.6.1
TOP PLATE FRAMING TO ACCOMMODATE PIPING

Where joists, trusses or rafters are spaced more than 16 inches on center and the bearing studs below are spaced 24 inches on center, such members shall bear within 5 inches of the studs beneath.

Exceptions:

1. The top plates are two 2-inch by 6-inch or two 3-inch by 4-inch members.
2. A third top plate is installed.
3. Solid blocking equal in size to the studs is installed to reinforce the double top plate.

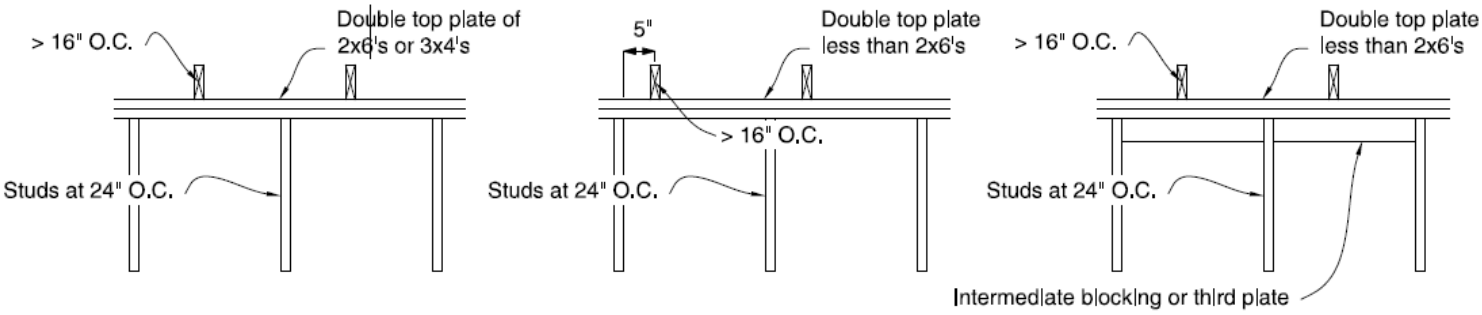

Bottom plate: Studs shall have full bearing on a nominal 2-by or larger plate or sill having a width at least equal to the width of the studs.

Drilling and notching of studs. Drilling and notching of studs shall be in accordance with the following:
1. Notching. Any stud in an exterior wall or bearing partition may be cut or notched to a depth not exceeding 25 percent of its width. Studs in nonbearing partitions maybe notched to a depth not to exceed 40 percent of a single stud width.
2. Drilling. Any stud may be bored or drilled, provided that the diameter of the resulting hole is no more than 60 percent of the stud width, the edge of the hole is no more than 5/8 inch to the edge of the stud, and the hole is not located in the same section as a cut or notch. Studs located in exterior walls or bearing partitions drilled over 40 percent and up to 60 percent shall also be doubled with no more than two successive doubled studs bored.

Exception: Use of *approved* stud shoes is permitted when they are installed in accordance with the manufacturer's recommendations.

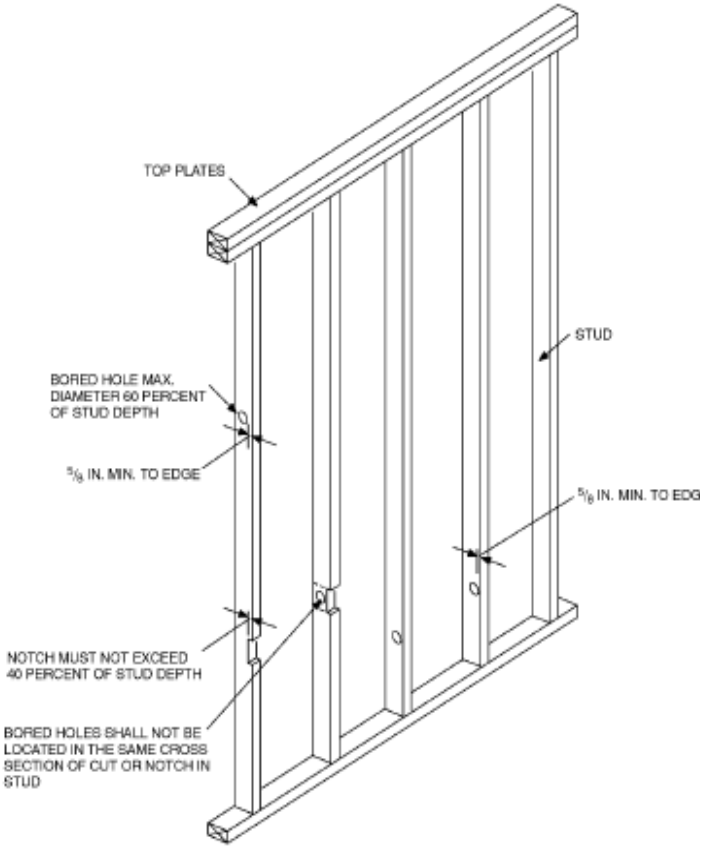

Interior non-bearing walls
Figure 602.6(2)

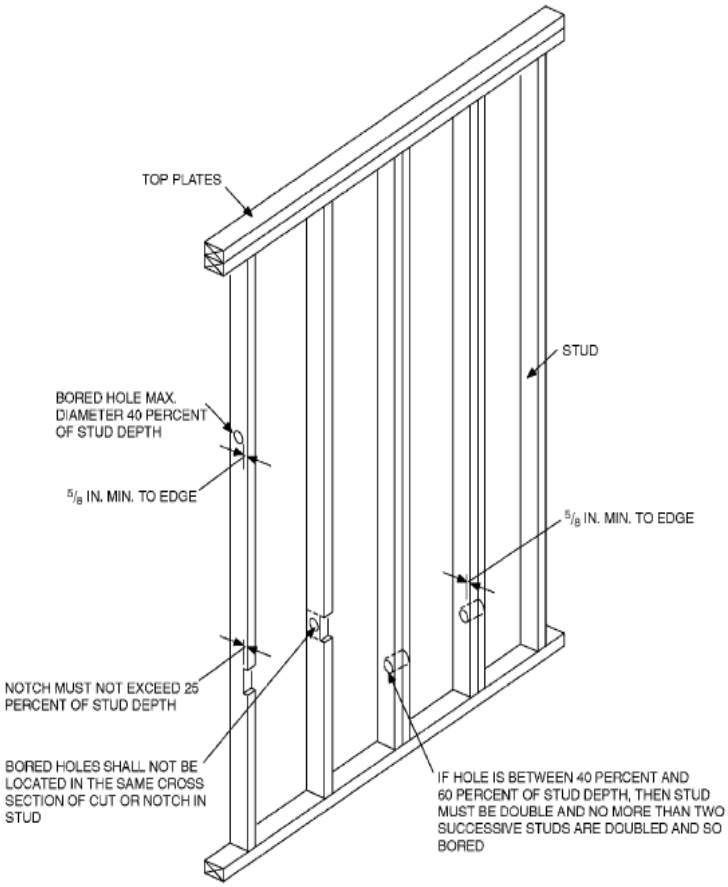

Exterior walls and bearing walls
Figure 602.6(1)

Headers. For header spans see Tables R502.5(1), R502.5(2) and R602.7.1 on the next 3 pages.

TABLE R502.5(1)
GIRDER SPANS[a] AND HEADER SPANS[a] FOR EXTERIOR BEARING WALLS
(Maximum spans for Douglas fir-larch, hem-fir, southern pine and spruce-pine-fir[b] and required number of jack studs)

GIRDERS AND HEADERS SUPPORTING	SIZE	GROUND SNOW LOAD (psf)[a]																	
		30						50						70					
		Building width[c] (feet)																	
		20		28		36		20		28		36		20		28		36	
		Span	NJ[d]	Span	NJ[d]	Span	NJ[d]	Span	NJ[d]	Span	NJ[d]	Span	NJ[d]	Span	NJ[d]	Span	NJ[d]	Span	NJ[d]
Roof and ceiling	2-2 × 4	3-6	1	3-2	1	2-10	1	3-2	1	2-9	1	2-6	1	2-10	1	2-6	1	2-3	1
	2-2 × 6	5-5	1	4-8	1	4-2	1	4-8	1	4-1	1	3-8	2	4-2	1	3-8	2	3-3	2
	2-2 × 8	6-10	1	5-11	2	5-4	2	5-11	2	5-2	2	4-7	2	5-4	2	4-7	2	4-1	2
	2-2 × 10	8-5	2	7-3	2	6-6	2	7-3	2	6-3	2	5-7	2	6-6	2	5-7	2	5-0	2
	2-2 × 12	9-9	2	8-5	2	7-6	2	8-5	2	7-3	2	6-6	2	7-6	2	6-6	2	5-10	3
	3-2 × 8	8-4	1	7-5	1	6-8	1	7-5	1	6-5	2	5-9	2	6-8	1	5-9	2	5-2	2
	3-2 × 10	10-6	1	9-1	2	8-2	2	9-1	2	7-10	2	7-0	2	8-2	2	7-0	2	6-4	2
	3-2 × 12	12-2	2	10-7	2	9-5	2	10-7	2	9-2	2	8-2	2	9-5	2	8-2	2	7-4	2
	4-2 × 8	9-2	1	8-4	1	7-8	1	8-4	1	7-5	1	6-8	1	7-8	1	6-8	1	5-11	2
	4-2 × 10	11-8	1	10-6	1	9-5	2	10-6	1	9-1	2	8-2	2	9-5	2	8-2	2	7-3	2
	4-2 × 12	14-1	1	12-2	2	10-11	2	12-2	2	10-7	2	9-5	2	10-11	2	9-5	2	8-5	2
Roof, ceiling and one center-bearing floor	2-2 × 4	3-1	1	2-9	1	2-5	1	2-9	1	2-5	1	2-2	1	2-7	1	2-3	1	2-0	1
	2-2 × 6	4-6	1	4-0	1	3-7	2	4-1	1	3-7	2	3-3	2	3-9	2	3-3	2	2-11	2
	2-2 × 8	5-9	2	5-0	2	4-6	2	5-2	2	4-6	2	4-1	2	4-9	2	4-2	2	3-9	2
	2-2 × 10	7-0	2	6-2	2	5-6	2	6-4	2	5-6	2	5-0	2	5-9	2	5-1	2	4-7	3
	2-2 × 12	8-1	2	7-1	2	6-5	2	7-4	2	6-5	2	5-9	3	6-8	2	5-10	3	5-3	3
	3-2 × 8	7-2	1	6-3	2	5-8	2	6-5	2	5-8	2	5-1	2	5-11	2	5-2	2	4-8	2
	3-2 × 10	8-9	2	7-8	2	6-11	2	7-11	2	6-11	2	6-3	2	7-3	2	6-4	2	5-8	2
	3-2 × 12	10-2	2	8-11	2	8-0	2	9-2	2	8-0	2	7-3	2	8-5	2	7-4	2	6-7	2
	4-2 × 8	8-1	1	7-3	1	6-7	1	7-5	1	6-6	1	5-11	2	6-10	1	6-0	2	5-5	2
	4-2 × 10	10-1	1	8-10	2	8-0	2	9-1	2	8-0	2	7-2	2	8-4	2	7-4	2	6-7	2
	4-2 × 12	11-9	2	10-3	2	9-3	2	10-7	2	9-3	2	8-4	2	9-8	2	8-6	2	7-7	2
Roof, ceiling and one clear span floor	2-2 × 4	2-8	1	2-4	1	2-1	1	2-7	1	2-3	1	2-0	1	2-5	1	2-1	1	1-10	1
	2-2 × 6	3-11	1	3-5	2	3-0	2	3-10	2	3-4	2	3-0	2	3-6	2	3-1	2	2-9	2
	2-2 × 8	5-0	2	4-4	2	3-10	2	4-10	2	4-2	2	3-9	2	4-6	2	3-11	2	3-6	2
	2-2 × 10	6-1	2	5-3	2	4-8	2	5-11	2	5-1	2	4-7	3	5-6	2	4-9	2	4-3	3
	2-2 × 12	7-1	2	6-1	3	5-5	3	6-10	2	5-11	3	5-4	3	6-4	2	5-6	3	5-0	3
	3-2 × 8	6-3	2	5-5	2	4-10	2	6-1	2	5-3	2	4-8	2	5-7	2	4-11	2	4-5	2
	3-2 × 10	7-7	2	6-7	2	5-11	2	7-5	2	6-5	2	5-9	2	6-10	2	6-0	2	5-4	2
	3-2 × 12	8-10	2	7-8	2	6-10	2	8-7	2	7-5	2	6-8	2	7-11	2	6-11	2	6-3	2
	4-2 × 8	7-2	1	6-3	2	5-7	2	7-0	1	6-1	2	5-5	2	6-6	1	5-8	2	5-1	2
	4-2 × 10	8-9	2	7-7	2	6-10	2	8-7	2	7-5	2	6-7	2	7-11	2	6-11	2	6-2	2
	4-2 × 12	10-2	2	8-10	2	7-11	2	9-11	2	8-7	2	7-8	2	9-2	2	8-0	2	7-2	2
Roof, ceiling and two center-bearing floors	2-2 × 4	2-7	1	2-3	1	2-0	1	2-6	1	2-2	1	1-11	1	2-4	1	2-0	1	1-9	1
	2-2 × 6	3-9	2	3-3	2	2-11	2	3-8	2	3-2	2	2-10	2	3-5	2	3-0	2	2-8	2
	2-2 × 8	4-9	2	4-2	2	3-9	2	4-7	2	4-0	2	3-8	2	4-4	2	3-9	2	3-5	2
	2-2 × 10	5-9	2	5-1	2	4-7	3	5-8	2	4-11	2	4-5	3	5-3	2	4-7	3	4-2	3
	2-2 × 12	6-8	2	5-10	3	5-3	3	6-6	2	5-9	3	5-2	3	6-1	3	5-4	3	4-10	3
	3-2 × 8	5-11	2	5-2	2	4-8	2	5-9	2	5-1	2	4-7	2	5-5	2	4-9	2	4-3	2
	3-2 × 10	7-3	2	6-4	2	5-8	2	7-1	2	6-2	2	5-7	2	6-7	2	5-9	2	5-3	2
	3-2 × 12	8-5	2	7-4	2	6-7	2	8-2	2	7-2	2	6-5	3	7-8	2	6-9	2	6-1	3
	4-2 × 8	6-10	1	6-0	2	5-5	2	6-8	1	5-10	2	5-3	2	6-3	2	5-6	2	4-11	2
	4-2 × 10	8-4	2	7-4	2	6-7	2	8-2	2	7-2	2	6-5	2	7-7	2	6-8	2	6-0	2
	4-2 × 12	9-8	2	8-6	2	7-8	2	9-5	2	8-3	2	7-5	2	8-10	2	7-9	2	7-0	2
Roof, ceiling, and two clear span floors	2-2 × 4	2-1	1	1-8	1	1-6	2	2-0	1	1-8	1	1-5	2	2-0	1	1-8	1	1-5	2
	2-2 × 6	3-1	2	2-8	2	2-4	2	3-0	2	2-7	2	2-3	2	2-11	2	2-7	2	2-3	2
	2-2 × 8	3-10	2	3-4	2	3-0	3	3-10	2	3-4	2	2-11	3	3-9	2	3-3	2	2-11	3

(continued)

City of Madison
PO Box 308 · 116 W. Center Street · Madison, SD 57042
(605) 256-7514 · (605) 256-7511 (Fax)
www.cityofmadisonsd.com

TABLE R502.5(1)—continued
GIRDER SPANS[a] AND HEADER SPANS[a] FOR EXTERIOR BEARING WALLS
(Maximum spans for Douglas fir-larch, hem-fir, southern pine and spruce-pine-fir[b] and required number of jack studs)

GIRDERS AND HEADERS SUPPORTING	SIZE	GROUND SNOW LOAD (psf)[e]																	
		30						50						70					
		Building width[c] (feet)																	
		20		28		36		20		28		36		20		28		36	
		Span	NJ[d]	Span	NJ[d]	Span	NJ[d]	Span	NJ[d]	Span	NJ[d]	Span	NJ[d]	Span	NJ[d]	Span	NJ[d]	Span	NJ[d]
Roof, ceiling, and two clear span floors	2-2 × 10	4-9	2	4-1	3	3-8	3	4-8	2	4-0	3	3-7	3	4-7	3	4-0	3	3-6	3
	2-2 × 12	5-6	3	4-9	3	4-3	3	5-5	3	4-8	3	4-2	3	5-4	3	4-7	3	4-1	4
	3-2 × 8	4-10	2	4-2	2	3-9	2	4-9	2	4-1	2	3-8	2	4-8	2	4-1	2	3-8	2
	3-2 × 10	5-11	2	5-1	2	4-7	3	5-10	2	5-0	2	4-6	3	5-9	2	4-11	2	4-5	3
	3-2 × 12	6-10	2	5-11	3	5-4	3	6-9	2	5-10	3	5-3	3	6-8	2	5-9	3	5-2	3
	4-2 × 8	5-7	2	4-10	2	4-4	2	5-6	2	4-9	2	4-3	2	5-5	2	4-8	2	4-2	2
	4-2 × 10	6-10	2	5-11	2	5-3	2	6-9	2	5-10	2	5-2	2	6-7	2	5-9	2	5-1	2
	4-2 × 12	7-11	2	6-10	2	6-2	3	7-9	2	6-9	2	6-0	3	7-8	2	6-8	2	5-11	3

For SI: 1 inch = 25.4 mm, 1 pound per square foot = 0.0479 kPa.
a. Spans are given in feet and inches.
b. Tabulated values assume #2 grade lumber.
c. Building width is measured perpendicular to the ridge. For widths between those shown, spans are permitted to be interpolated.
d. NJ - Number of jack studs required to support each end. Where the number of required jack studs equals one, the header is permitted to be supported by an approved framing anchor attached to the full-height wall stud and to the header.
e. Use 30 psf ground snow load for cases in which ground snow load is less than 30 psf and the roof live load is equal to or less than 20 psf.

TABLE R502.5(2)
GIRDER SPANS[a] AND HEADER SPANS[a] FOR INTERIOR BEARING WALLS
(Maximum spans for Douglas fir-larch, hem-fir, southern pine and spruce-pine-fir[b] and required number of jack studs)

HEADERS AND GIRDERS SUPPORTING	SIZE	BUILDING Width[c] (feet)					
		20		28		36	
		Span	NJ[d]	Span	NJ[d]	Span	NJ[d]
One floor only	2-2 × 4	3-1	1	2-8	1	2-5	1
	2-2 × 6	4-6	1	3-11	1	3-6	1
	2-2 × 8	5-9	1	5-0	2	4-5	2
	2-2 × 10	7-0	2	6-1	2	5-5	2
	2-2 × 12	8-1	2	7-0	2	6-3	2
	3-2 × 8	7-2	1	6-3	1	5-7	2
	3-2 × 10	8-9	1	7-7	2	6-9	2
	3-2 × 12	10-2	2	8-10	2	7-10	2
	4-2 × 8	9-0	1	7-8	1	6-9	1
	4-2 × 10	10-1	1	8-9	1	7-10	2
	4-2 × 12	11-9	1	10-2	2	9-1	2
Two floors	2-2 × 4	2-2	1	1-10	1	1-7	1
	2-2 × 6	3-2	2	2-9	2	2-5	2
	2-2 × 8	4-1	2	3-6	2	3-2	2
	2-2 × 10	4-11	2	4-3	2	3-10	3
	2-2 × 12	5-9	2	5-0	3	4-5	3
	3-2 × 8	5-1	2	4-5	2	3-11	2
	3-2 × 10	6-2	2	5-4	2	4-10	2
	3-2 × 12	7-2	2	6-3	2	5-7	3
	4-2 × 8	6-1	1	5-3	2	4-8	2
	4-2 × 10	7-2	2	6-2	2	5-6	2
	4-2 × 12	8-4	2	7-2	2	6-5	2

For SI: 1 inch = 25.4 mm, 1 foot = 304.8 mm.
a. Spans are given in feet and inches.
b. Tabulated values assume #2 grade lumber.
c. Building width is measured perpendicular to the ridge. For widths between those shown, spans are permitted to be interpolated.
d. NJ - Number of jack studs required to support each end. Where the number of required jack studs equals one, the header is permitted to be supported by an approved framing anchor attached to the full-height wall stud and to the header.

City of Madison
PO Box 308 · 116 W. Center Street · Madison, SD 57042
(605) 256-7514 · (605) 256-7511(Fax)
www.cityofmadisonsd.com

Single member headers. Single headers shall be framed with a single flat 2-inch nominal member or wall plate not less in width than the wall studs on the top and bottom of the header.

TABLE R602.7.1
SPANS FOR MINIMUM No.2 GRADE SINGLE HEADER[a, b, c, f]

SINGLE HEADERS SUPPORTING	SIZE	WOOD SPECIES	GROUND SNOW LOAD (psf)								
			≤ 20[d]			30			50		
			Building Width (feet)[e]								
			20	28	36	20	28	36	20	28	36
Roof and ceiling	2 × 8	Spruce-Pine-Fir	4-10	4-2	3-8	4-3	3-8	3-3	3-7	3-0	2-8
		Hem-Fir	5-1	4-4	3-10	4-6	3-10	3-5	3-9	3-2	2-10
		Douglas-Fir or Southern Pine	5-3	4-6	4-0	4-7	3-11	3-6	3-10	3-3	2-11
	2 × 10	Spruce-Pine-Fir	6-2	5-3	4-8	5-5	4-8	4-2	4-6	3-11	3-1
		Hem-Fir	6-6	5-6	4-11	5-8	4-11	4-4	4-9	4-1	3-7
		Douglas-Fir or Southern Pine	6-8	5-8	5-1	5-10	5-0	4-6	4-11	4-2	3-9
	2 × 12	Spruce-Pine-Fir	7-6	6-5	5-9	6-7	5-8	4-5	5-4	3-11	3-1
		Hem-Fir	7-10	6-9	6-0	6-11	5-11	5-3	5-9	4-8	3-8
		Douglas-Fir or Southern Pine	8-1	6-11	6-2	7-2	6-1	5-5	5-11	5-1	4-6
Roof, ceiling and one center-bearing floor	2 × 8	Spruce-Pine-Fir	3-10	3-3	2-11	3-9	3-3	2-11	3-5	2-11	2-7
		Hem-Fir	4-0	3-5	3-1	3-11	3-5	3-0	3-7	3-0	2-8
		Douglas-Fir or Southern Pine	4-1	3-7	3-2	4-1	3-6	3-1	3-8	3-2	2-9
	2 × 10	Spruce-Pine-Fir	4-11	4-2	3-8	4-10	4-1	3-6	4-4	3-7	2-10
		Hem-Fir	5-1	4-5	3-11	5-0	4-4	3-10	4-6	3-11	3-4
		Douglas-Fir or Southern Pine	5-3	4-6	4-1	5-2	4-5	4-0	4-8	4-0	3-7
	2 × 12	Spruce-Pine-Fir	5-8	4-2	3-4	5-5	4-0	3-6	4-9	3-6	2-10
		Hem-Fir	5-11	4-11	3-11	5-10	4-9	4-2	5-5	4-2	3-4
		Douglas-Fir or Southern Pine	6-1	5-3	4-8	6-0	5-2	4-10	5-7	4-10	4-3
Roof, ceiling and one clear span floor	2 × 8	Spruce-Pine-Fir	3-5	2-11	2-7	3-4	2-11	2-7	3-3	2-10	2-6
		Hem-Fir	3-7	3-1	2-9	3-6	3-0	2-8	3-5	2-11	2-7
		Douglas-Fir or Southern Pine	3-8	3-2	2-10	3-7	3-1	2-9	3-6	3-0	2-9
	2 × 10	Spruce-Pine-Fir	4-4	3-7	2-10	4-3	3-6	2-9	4-2	3-4	2-7
		Hem-Fir	4-7	3-11	3-5	4-6	3-10	3-3	4-4	3-9	3-1
		Douglas-Fir or Southern Pine	4-8	4-0	3-7	4-7	4-0	3-6	4-6	3-10	3-5
	2 × 12	Spruce-Pine-Fir	4-11	3-7	2-10	4-9	3-6	2-9	4-6	3-4	2-7
		Hem-Fir	5-6	4-3	3-5	5-6	4-2	3-3	5-4	3-11	3-1
		Douglas-Fir or Southern Pine	5-8	4-11	4-4	5-7	4-10	4-3	5-6	4-8	4-2

For SI: 1 inch=25.4 mm, 1 pound per square foot = 0.0479 kPa.
a. Spans are given in feet and inches.
b. Table is based on a maximum roof-ceiling dead load of 15 psf.
c. The header is permitted to be supported by an approved framing anchor attached to the full-height wall stud and to the header in lieu of the required jack stud.
d. The 20 psf ground snow load condition shall apply only when the roof pitch is 9:12 or greater. In conditions where the ground snow load is 30 psf or less and the roof pitch is less than 9:12, use the 30 psf ground snow load condition.
e. Building width is measured perpendicular to the ridge. For widths between those shown, spans are permitted to be interpolated.
f. The header shall bear on a minimum of one jack stud at each end.

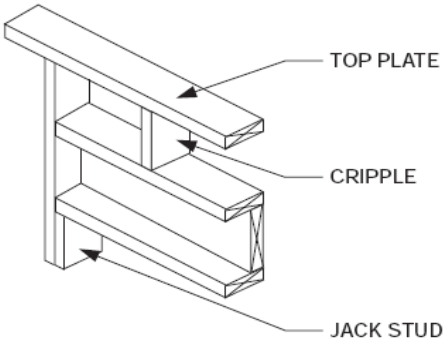

FIGURE R602.7.1(1)
SINGLE MEMBER HEADER IN EXTERIOR BEARING WALL

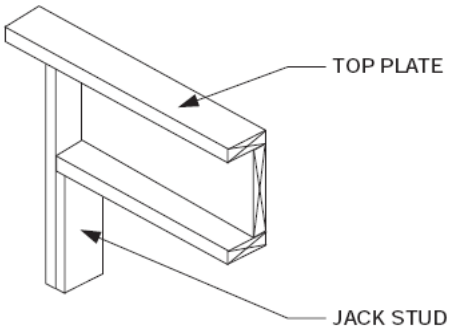

FIGURE R602.7.1(2)
ALTERNATIVE SINGLE MEMBER HEADER WITHOUT CRIPPLE

Wood structural panel box headers. Wood structural panel box headers shall be constructed in accordance with Figure R602.7.2 and Table R602.7.2.

TABLE R602.7.2
MAXIMUM SPANS FOR WOOD STRUCTURAL PANEL BOX HEADERS[a]

HEADER CONSTRUCTION[b]	HEADER DEPTH (Inches)	HOUSE DEPTH (feet)				
		24	26	28	30	32
Wood structural panel–one side	9 15	4 5	4 5	3 4	3 3	— 3
Wood structural panel–both sides	9 15	7 8	5 8	5 7	4 7	3 6

For SI: 1 inch = 25.4 mm, 1 foot = 304.8 mm.
a. Spans are based on single story with clear-span trussed roof or two-story with floor and roof supported by interior-bearing walls.
b. See Figure R602.7.2 for construction details.

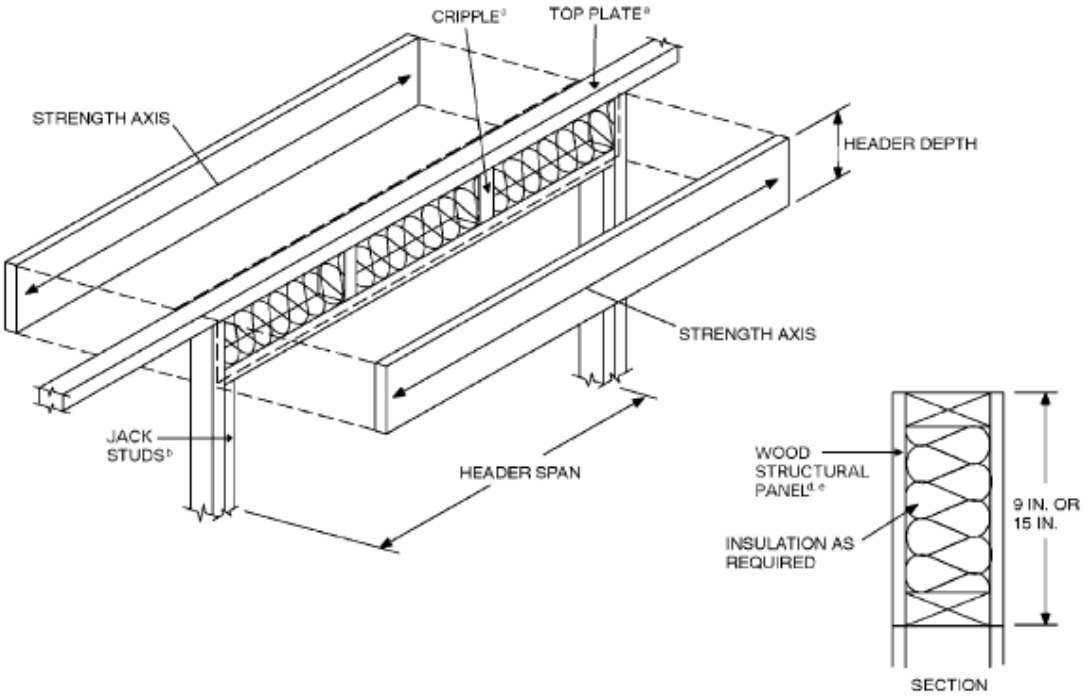

For SI: 1 inch = 25.4 mm, 1 foot = 304.8 mm.
NOTES:
a. The top plate shall be continuous over header.
b. Jack studs shall be used for spans over 4 feet.
c. Cripple spacing shall be the same as for studs.
d. Wood structural panel faces shall be single pieces of $^{15}/_{32}$-inch-thick Exposure 1 (exterior glue) or thicker, installed on the interior or exterior or both sides of the header.
e. Wood structural panel faces shall be nailed to framing and cripples with 8d common or galvanized box nails spaced 3 inches on center, staggering alternate nails $^{1}/_{2}$ inch. Galvanized nails shall be hot-dipped or tumbled.

FIGURE R602.7.2
TYPICAL WOOD STRUCTURAL PANEL BOX HEADER CONSTRUCTION

The IRC Wall Bracing provisions have been completely reorganized in the code to put each method in a separate section. This adds choices but can be confusing. Continuous wall sheathing (CS-WSP) has been the most utilized means of achieving wall bracing in Madison and is easier to understand but all methods are code compliant and up to the designer/builders discretion on which to use. New in 2012 is simplified wall bracing which is an alternative method of bracing.

Braced wall lines. For the purpose of determining the amount and location of bracing required in each story level of a building, *braced wall lines* shall be designated as straight lines in the building plan placed in accordance with this section.

- ✓ Length of a braced wall line. The length of a braced wall line shall be the distance between its ends. The end of a braced wall line shall be the intersection with a perpendicular braced wall line, an angled braced wall line or an exterior wall as shown in the figures and described below.
- ✓ Offsets along a braced wall line. All exterior walls parallel to a braced wall line shall be offset not more than 4 feet from the designated braced wall line location (as shown in figures). Interior walls used as bracing shall be offset not more than 4 feet from a braced wall line through the interior of the building.
- ✓ Spacing of braced wall lines. The spacing between parallel braced wall lines shall be 60 feet maximum. Intermediate braced wall lines through the interior of the building shall be permitted.

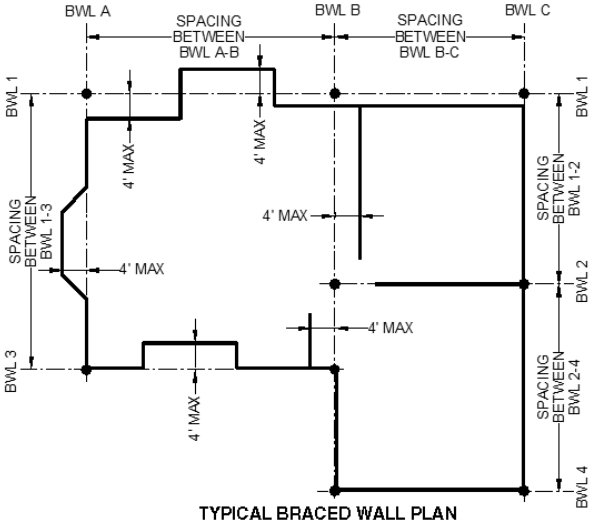

TYPICAL BRACED WALL PLAN

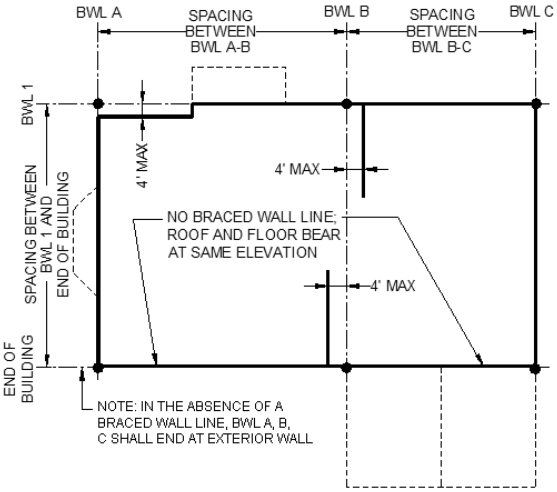

TYPICAL UPPER FLOOR BRACED WALL PLAN

Angled walls. Any portion of a wall along a *braced wall line* shall be permitted to angle out of plane for a maximum diagonal length of 8 feet. Where the angled wall occurs at a corner, the length of the braced wall line shall be measured from the projected corner as shown.

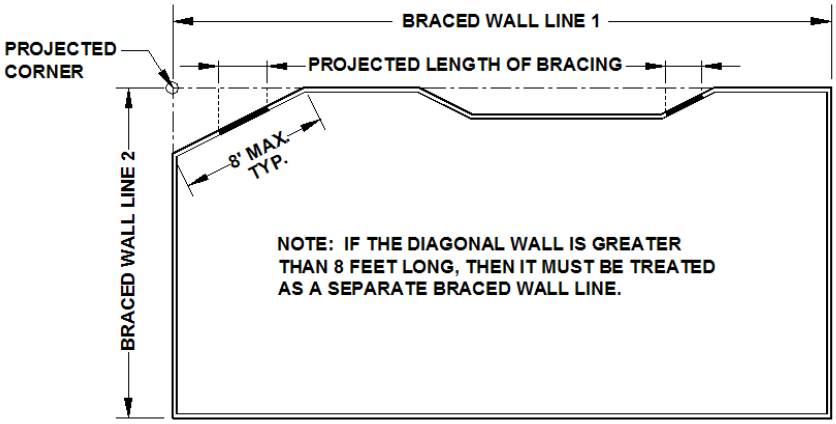

Braced wall panels. *Braced wall panel*s shall be full-height sections of wall that shall have no vertical or horizontal offsets. *Braced wall panel*s shall be constructed and placed along a *braced wall line* in accordance with this section.

TABLE R602.10.3(1)
BRACING REQUIREMENTS BASED ON WIND SPEED

• EXPOSURE CATEGORY B • 30 FOOT MEAN ROOF HEIGHT • 10 FOOT EAVE-TO-RIDGE HEIGHT • 10 FOOT WALL HEIGHT • 2 BRACED WALL LINES			MINIMUM TOTAL LENGTH (FEET) OF BRACED WALL PANELS REQUIRED ALONG EACH BRACED WALL LINE[a]			
Basic Wind Speed (mph)	Story Location	Braced Wall Line Spacing (feet)	Method LIB[b]	Method GB	Methods DWB, WSP, SFB, PBS, PCP, HPS, CS-SFB[c]	Methods CS-WSP, CS-G, CS-PF
≤ 85		10	3.5	3.5	2.0	1.5
		20	6.0	6.0	3.5	3.0
		30	8.5	8.5	5.0	4.5
		40	11.5	11.5	6.5	5.5
		50	14.0	14.0	8.0	7.0
		60	16.5	16.5	9.5	8.0
		10	6.5	6.5	3.5	3.0
		20	11.5	11.5	6.5	5.5
		30	16.5	16.5	9.5	8.0
		40	21.5	21.5	12.5	10.5
		50	26.5	26.5	15.0	13.0
		60	31.5	31.5	18.0	15.5
		10	NP	9.0	5.5	4.5
		20	NP	17.0	10.0	8.5
		30	NP	24.5	14.0	12.0
		40	NP	32.0	18.0	15.5
		50	NP	39.0	22.5	19.0
		60	NP	46.5	26.5	22.5
≤ 90		10	3.5	3.5	2.0	2.0
		20	7.0	7.0	4.0	3.5
		30	9.5	9.5	5.5	5.0
		40	12.5	12.5	7.5	6.0
		50	15.5	15.5	9.0	7.5
		60	18.5	18.5	10.5	9.0
		10	7.0	7.0	4.0	3.5
		20	13.0	13.0	7.5	6.5
		30	18.5	18.5	10.5	9.0
		40	24.0	24.0	14.0	12.0
		50	29.5	29.5	17.0	14.5
		60	35.0	35.0	20.0	17.0
		10	NP	10.5	6.0	5.0
		20	NP	19.0	11.0	9.5
		30	NP	27.5	15.5	13.5
		40	NP	35.5	20.5	17.5
		50	NP	44.0	25.0	21.5
		60	NP	52.0	30.0	25.5

Minimum number of braced wall panels. Braced wall *lines* with a length of 16 feet or less shall have a minimum of two braced wall *panel*s of any length meeting code or one braced wall *panel* equal to 48 inches or more. Braced wall *lines* greater than 16 feet shall have a minimum of two braced wall *panels*.

Locations of braced wall panels. A braced wall *panel* shall begin within 10 feet from each end of a braced wall *line*. The distance between adjacent edges of braced wall *panel*s along a braced wall *line* shall be no greater than 20 feet as shown in Figure R602.10.2.2.

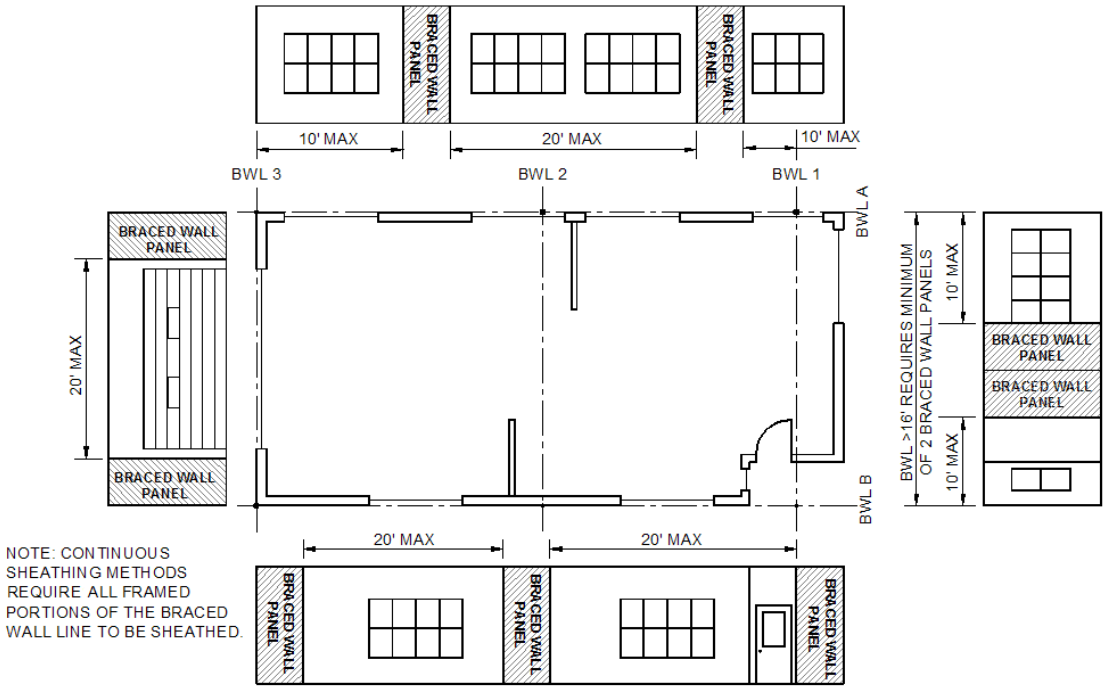

Figure R602.10.2.2

Only braced wall panels parallel to the braced wall line shall contribute toward the required length of bracing of that braced wall line. Braced wall panels along an angled wall meeting the minimum length requirements on page 48 shall be permitted to contribute its projected length toward the minimum required length of bracing for the braced wall line. Any braced wall panel on an angled wall at the end of a braced wall line shall contribute its projected length for only one of the braced wall lines at the projected corner.

Construction methods for braced wall panels. Intermittent and continuously sheathed braced wall panels shall be constructed in accordance with the methods listed in the following; Table R602.10.4.

TABLE R602.10.4
BRACING METHODS

METHODS, MATERIAL		MINIMUM THICKNESS	FIGURE	CONNECTION CRITERIA[a]	
				Fasteners	Spacing
Intermittent Bracing Method	LIB Let-in-bracing	1 × 4 wood or approved metal straps at 45° to 60° angles for maximum 16" stud spacing		Wood: 2-8d common nails or 3-8d ($2^1/_2$" long x 0.113" dia.) nails	Wood: per stud and top and bottom plates
				Metal strap: per manufacturer	Metal: per manufacturer
	DWB Diagonal wood boards	$^3/_4$"(1" nominal) for maximum 24" stud spacing	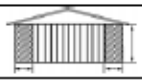	2-8d ($2^1/_2$" long × 0.113" dia.) nails or 2 - $1^3/_4$" long staples	Per stud
	WSP Wood structural panel (See Section R604)	$^3/_8$"		Exterior sheathing per Table R602.3(3)	6" edges 12" field
				Interior sheathing per Table R602.3(1) or R602.3(2)	Varies by fastener
	BV-WSP[b] Wood Structural Panels with Stone or Masonry Veneer (See Section R602.10.6.5)	$^7/_{16}$"	See Figure R602.10.6.5	8d common ($2^1/_2$" × 0.131) nails	4" at panel edges 12" at intermediate supports 4" at braced wall panel end posts
	SFB Structural fiberboard sheathing	$^1/_2$" or $^{25}/_{32}$" for maximum 16" stud spacing		$1^1/_2$" long × 0.12" dia. (for $^1/_2$" thick sheathing) $1^3/_4$" long × 0.12" dia. (for $^{25}/_{32}$" thick sheathing) galvanized roofing nails or 8d common ($2^1/_2$" long × 0.131" dia.) nails	3" edges 6" field
	GB Gypsum board	$^1/_2$"		Nails or screws per Table R602.3(1) for exterior locations	For all braced wall panel locations: 7" edges (including top and bottom plates) 7" field
				Nails or screws per Table R702.3.5 for interior locations	
	PBS Particleboard sheathing (See Section R605)	$^3/_8$" or $^1/_2$" for maximum 16" stud spacing		For $^3/_8$", 6d common (2" long × 0.113" dia.) nails For $^1/_2$", 8d common ($2^1/_2$" long × 0.131" dia.) nails	3" edges 6" field
	PCP Portland cement plaster	See Section R703.6 for maximum 16" stud spacing		$1^1/_2$" long, 11 gage, $^7/_{16}$" dia. head nails or $^7/_8$" long, 16 gage staples	6" o.c. on all framing members
	HPS Hardboard panel siding	$^7/_{16}$" for maximum 16" stud spacing		0.092" dia., 0.225" dia. head nails with length to accommodate $1^1/_2$" penetration into studs	4" edges 8" field
	ABW Alternate braced wall	$^3/_8$"		See Section R602.10.6.1	See Section R602.10.6.1

(continued)

TABLE R602.10.4—continued
BRACING METHODS

METHODS, MATERIAL		MINIMUM THICKNESS	FIGURE	CONNECTION CRITERIA[a]	
				Fasteners	Spacing
Intermittent Bracing Methods	**PFH** Portal frame with hold-downs	$^3/_8$"		See Section R602.10.6.2	See Section R602.10.6.2
	PFG Portal frame at garage	$^7/_{16}$"	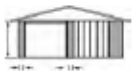	See Section R602.10.6.3	See Section R602.10.6.3
Continuous Sheathing Methods	**CS-WSP** Continuously sheathed wood structural panel	$^3/_8$"		Exterior sheathing per Table R602.3(3)	6" edges 12" field
				Interior sheathing per Table R602.3(1) or R602.3(2)	Varies by fastener
	CS-G[b, c] Continuously sheathed wood structural panel adjacent to garage openings	$^3/_8$"		See Method CS-WSP	See Method CS-WSP
	CS-PF Continuously sheathed portal frame	$^7/_{16}$"		See Section R602.10.6.4	See Section R602.10.6.4
	CS-SFB[d] Continuously sheathed structural fiberboard	$^1/_2$" or $^{25}/_{32}$" for maximum 16" stud spacing		$1^1/_2$" long × 0.12" dia. (for $^1/_2$" thick sheathing) $1^3/_4$" long × 0.12" dia. (for $^{25}/_{32}$" thick sheathing) galvanized roofing nails or 8d common ($2^1/_2$" long × 0.131" dia.) nails	3" edges 6" field

For SI: 1 inch = 25.4 mm, 1 foot = 305 mm, 1 degree = 0.0175 rad, 1 pound per square foot = 47.8 N/m^2, 1 mile per hour = 0.447 m/s.

a. Adhesive attachment of wall sheathing, including Method GB, shall not be permitted in Seismic Design Categories C, D_0, D_1 and D_2.

b. Applies to panels next to garage door opening when supporting gable end wall or roof load only. May only be used on one wall of the garage. In Seismic Design Categories D_0, D_1 and D_2 roof covering dead load may not exceed 3 psf.

c. Garage openings adjacent to a Method CS-G panel shall be provided with a header in accordance with Table R502.5(1). A full height clear opening shall not be permitted adjacent to a Method CS-G panel.

d. Method CS-SFB does not apply in Seismic Design Categories D_0, D_1 and D_2 and in areas where the wind speed exceeds 100 mph.

e. Method applies to detached one- and two-family dwellings in Seismic Design Categories D_0 through D_2 only.

Mixing methods. Mixing of bracing methods shall be permitted as follows:

1. Mixing intermittent bracing and continuous sheathing methods from story to story is permitted.
2. Mixing intermittent bracing methods from *braced wall line* to *braced wall line* within a story is permitted.
3. Mixing of intermittent bracing and continuous sheathing methods from *braced wall line* to *braced wall line* within a story is permitted.
4. Mixing of continuous sheathing methods CSWSP, CS-G and CS-PF along a *braced wall line* shall be permitted.

Minimum length of a braced wall panel. The minimum length of a *braced wall panel* shall comply with following table. For Methods CS-WSP and CS-SFB, the minimum panel length shall be based on the adjacent clear opening height in accordance with the table below and Figure R602.10.5 on the next page. When a panel has an opening on either side of differing heights, the taller opening height shall be used to determine the panel length.

TABLE R602.10.5
MINIMUM LENGTH OF BRACED WALL PANELS

METHOD (See Table R602.10.4)		MINIMUM LENGTH[a] (Inches) Wall Height					CONTRIBUTING LENGTH (Inches)
		8 feet	9 feet	10 feet	11 feet	12 feet	
DWB, WSP, SFB, PBS, PCP, HPS, BV-WSP		48	48	48	53	58	Actual[b]
GB		48	48	48	53	58	Double sided = Actual Single sided = 0.5 × Actual
LIB		55	62	69	NP	NP	Actual[b]
ABW	SDC A, B and C, wind speed < 110 mph	28	32	34	38	42	48
	SDC D_0, D_1 and D_2, wind speed < 110 mph	32	32	34	NP	NP	
PFH	Supporting roof only	16	16	16	18[c]	20[c]	48
	Supporting one story and roof	24	24	24	27[c]	29[c]	48
PFG		24	27	30	33[d]	36[d]	1.5 × Actual[b]
CS-G		24	27	30	33	36	Actual[b]
CS-PF		16	18	20	22[e]	24[e]	Actual[b]
CS-WSP, CS-SFB	Adjacent clear opening height (inches)						
	≤ 64	24	27	30	33	36	Actual[b]
	68	26	27	30	33	36	
	72	27	27	30	33	36	
	76	30	29	30	33	36	
	80	32	30	30	33	36	
	84	35	32	32	33	36	
	88	38	35	33	33	36	
	92	43	37	35	35	36	
	96	48	41	38	36	36	
	100	—	44	40	38	38	
	104	—	49	43	40	39	
	108	—	54	46	43	41	
	112	—	—	50	45	43	
	116	—	—	55	48	45	
	120	—	—	60	52	48	
	124	—	—	—	56	51	
	128	—	—	—	61	54	
	132	—	—	—	66	58	
	136	—	—	—	—	62	
	140	—	—	—	—	66	
	144	—	—	—	—	72	

For SI: 1 inch = 25.4 mm, 1 foot = 304.8 mm, 1 mile per hour = 0.447 m/s.
NP = Not Permitted.
a. Linear interpolation shall be permitted.
b. Use the actual length when it is greater than or equal to the minimum length.
c. Maximum header height for PFH is 10 feet in accordance with Figure R602.10.6.2, but wall height may be increased to 12 feet with pony wall.
d. Maximum opening height for PFG is 10 feet in accordance with Figure R602.10.6.3, but wall height may be increased to 12 feet with pony wall.
e. Maximum opening height for CS-PF is 10 feet in accordance with Figure R602.10.6.4, but wall height may be increased to 12 feet with pony wall.

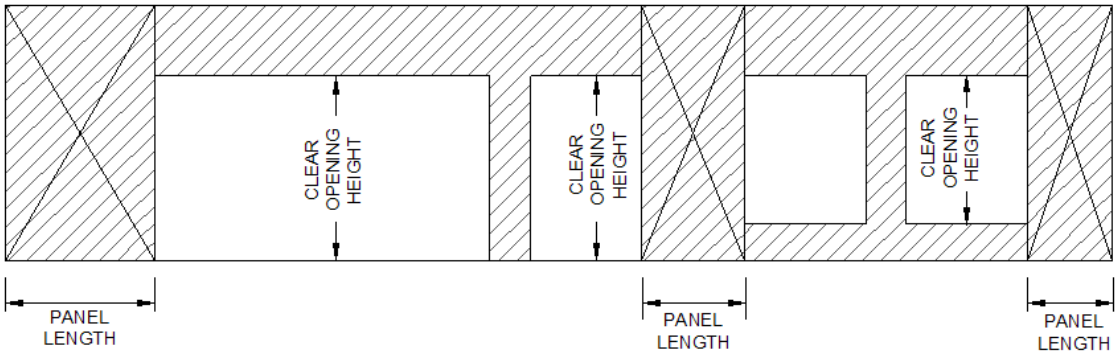

Figure R602.10.5

Braced wall panel connections. *Braced wall panel*s shall be connected to floor framing or foundations as follows:

1. Where joists are perpendicular to a *braced wall panel* above or below, a rim joist, band joist or blocking shall be provided along the entire length of the *braced wall panel* in accordance with Figure R602.10.8(1) on next page. Fastening of top and bottom wall plates to framing, rim joist, band joist and/or blocking shall be in accordance with pages 35-36.
2. Where joists are parallel to a *braced wall panel* above or below, a rim joist, end joist or other parallel framing member shall be provided directly above and below the *braced wall panel* in accordance with Figure R602.10.8(2) on next page. Where a parallel framing member cannot be located directly above and below the panel, full-depth blocking at 16-inch spacing shall be provided between the parallel framing members to each side of the *braced wall panel* in accordance with Figure R602.10.8(2). Fastening of blocking and wall plates shall be in accordance with Table R602.3(1) on page 35-36 and Figure R602.10.8(2) on next page.

Connections to roof framing. Top plates of exterior *braced wall panels* shall be attached to rafters or roof trusses above in accordance with Table R602.3(1) on pages 35-36 and this section. Where required by this section, blocking between rafters or roof trusses shall be attached to top plates of *braced wall panel*s and to rafters and roof trusses in accordance with Table R602.3(1). A continuous band, rim, or header joist or roof truss parallel to the *braced wall panels* shall be permitted to replace the blocking required by this section. Blocking shall not be required over openings in continuously-sheathed *braced wall lines*. In addition to the requirements of this section, lateral support shall be provided for rafters and ceiling joists in accordance with the roof framing and trusses section on pages 69-84

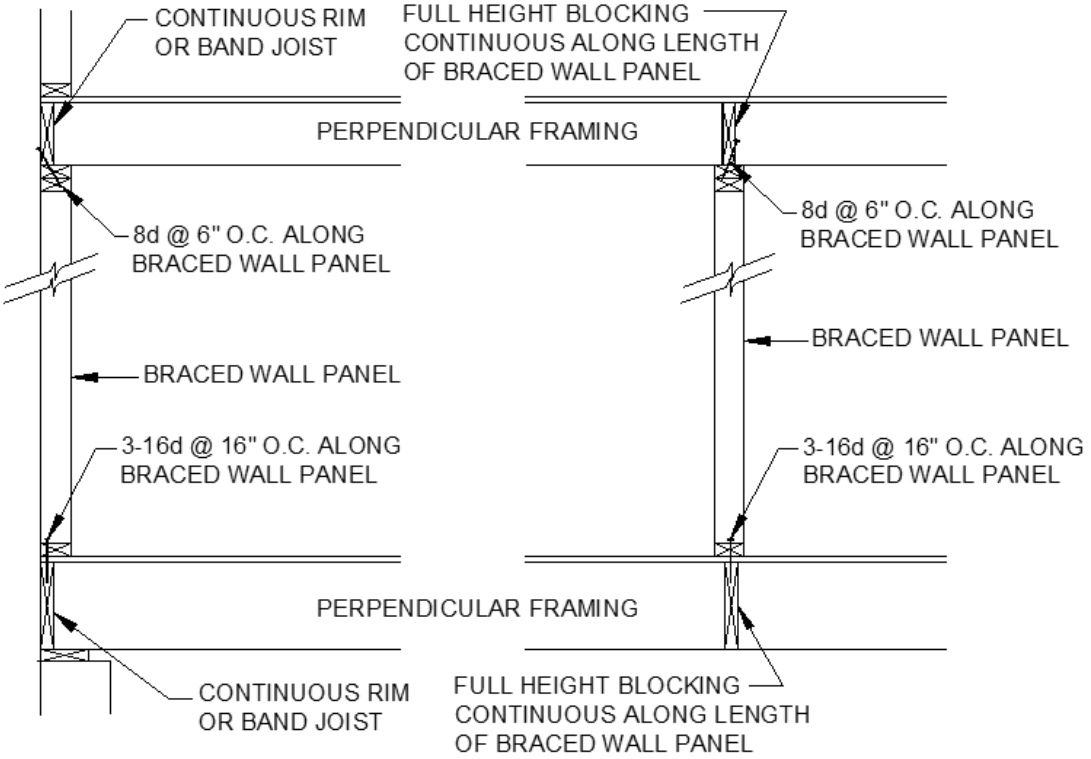

Figure R602.10.8(1) Braced Wall Panel Connection When Perpendicular to Floor/Ceiling Framing

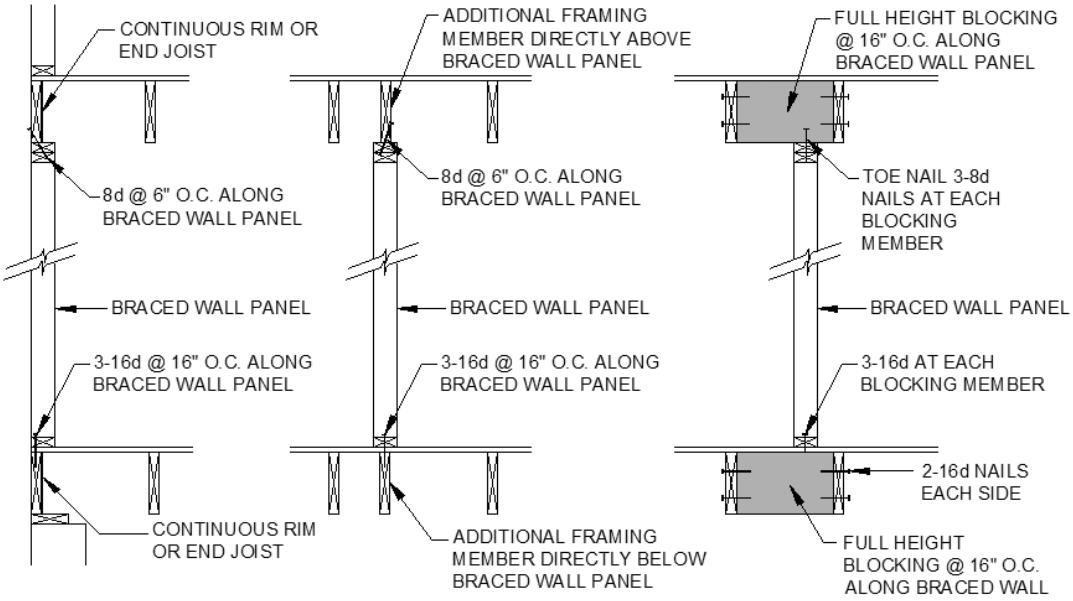

Figure R602.10.8(2) Braced Wall Panel Connection When Parallel to Floor/Ceiling Framing

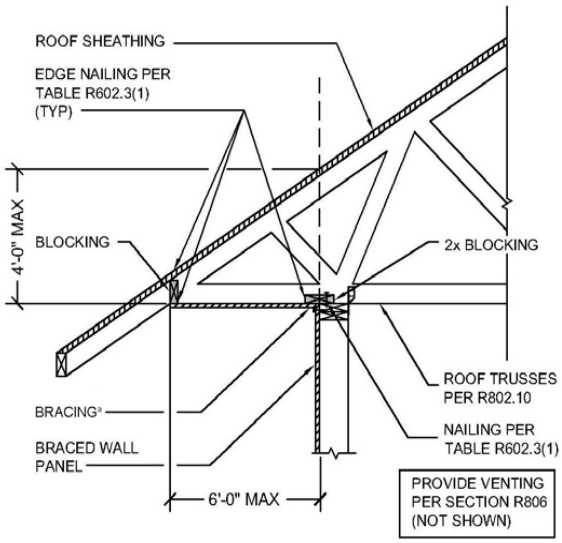

Figure R602.10.8.2(1)
Braced Wall Panel Connection to Perpendicular Rafters

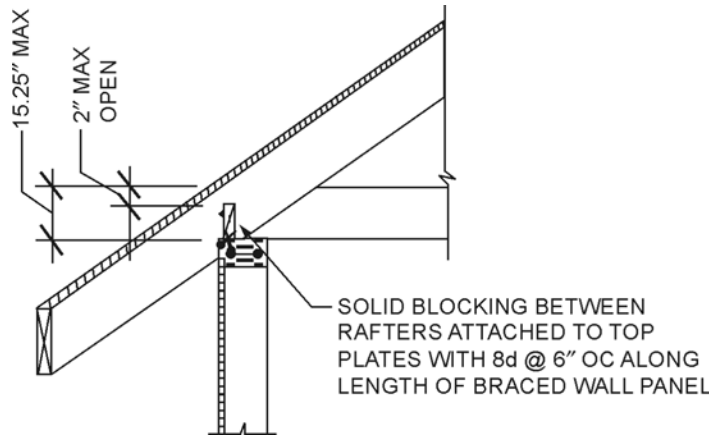

Figure R602.10.8.2(2)
Braced Wall Panel Connection Option To Perpendicular Rafters or Roof Trusses

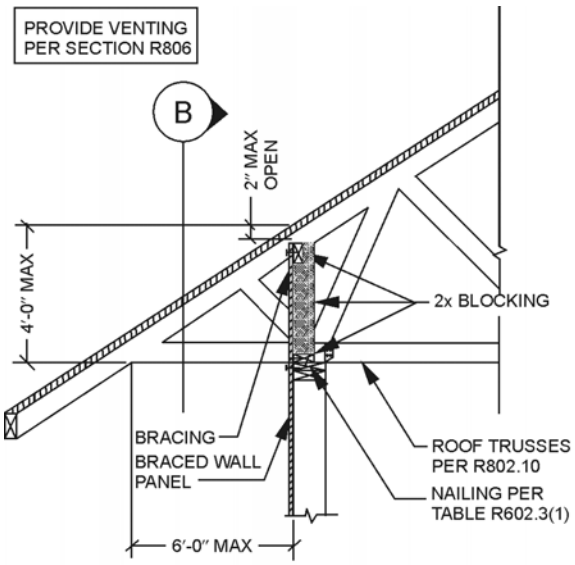

A SECTION

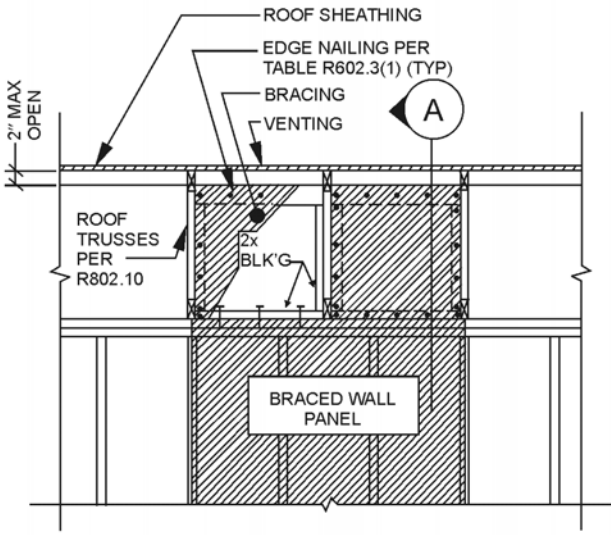

B ELEVATION

Figure R602.10.8.2(3) Braced Wall Panel Connection Option to Perpendicular Rafters or Roof Trusses

Continuous sheathing methods. This is the most popular means of achieving wall bracing in Madison and is probably the easiest to understand. Continuous sheathing methods require structural panel sheathing to be used on all sheathable surfaces on one side of a braced wall line including areas above and below openings and gable end walls and shall meet the requirements of the figures below.

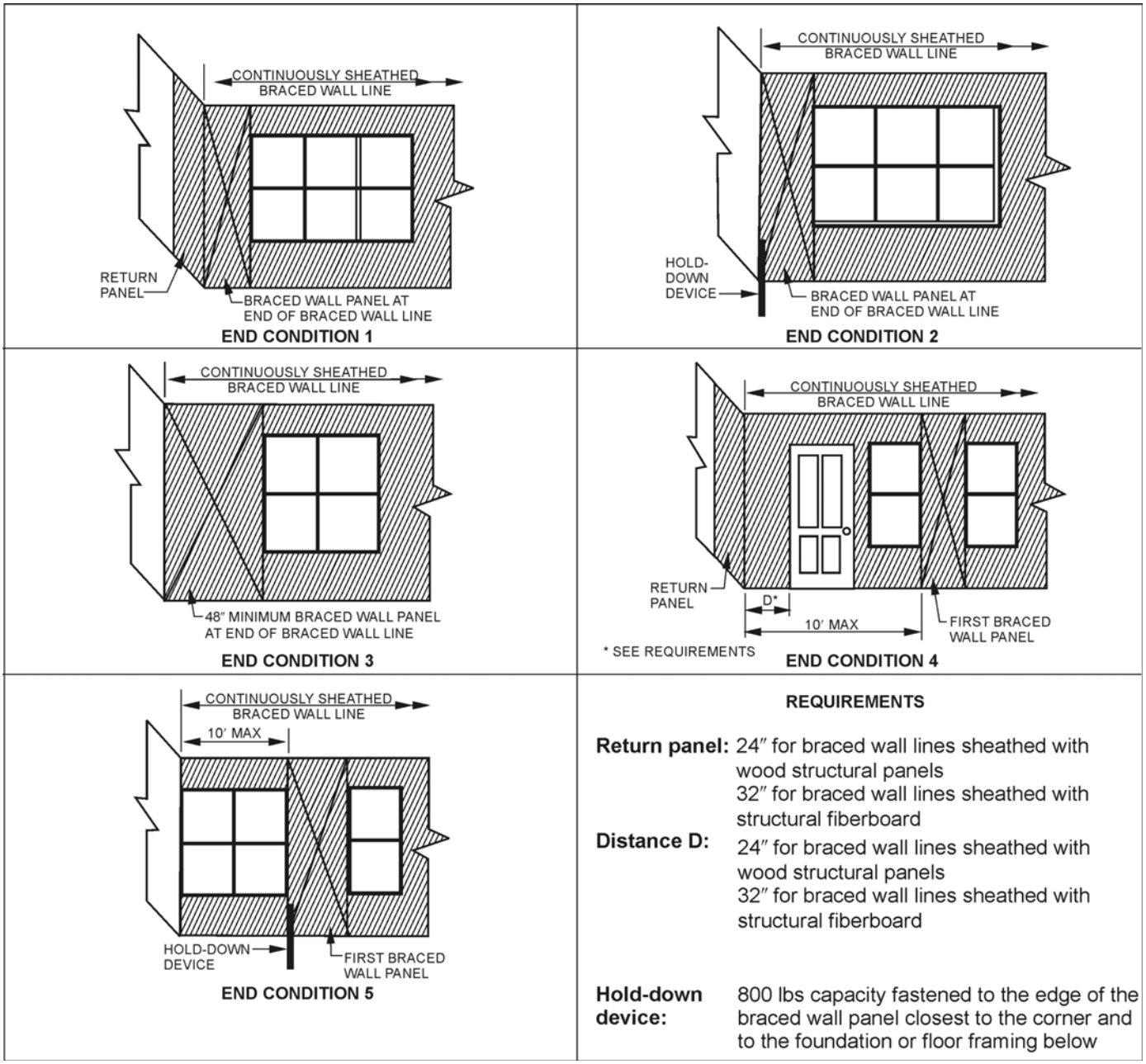

Figure R602.10.7

End Conditions for Braced Wall Lines With Continuous Sheathing

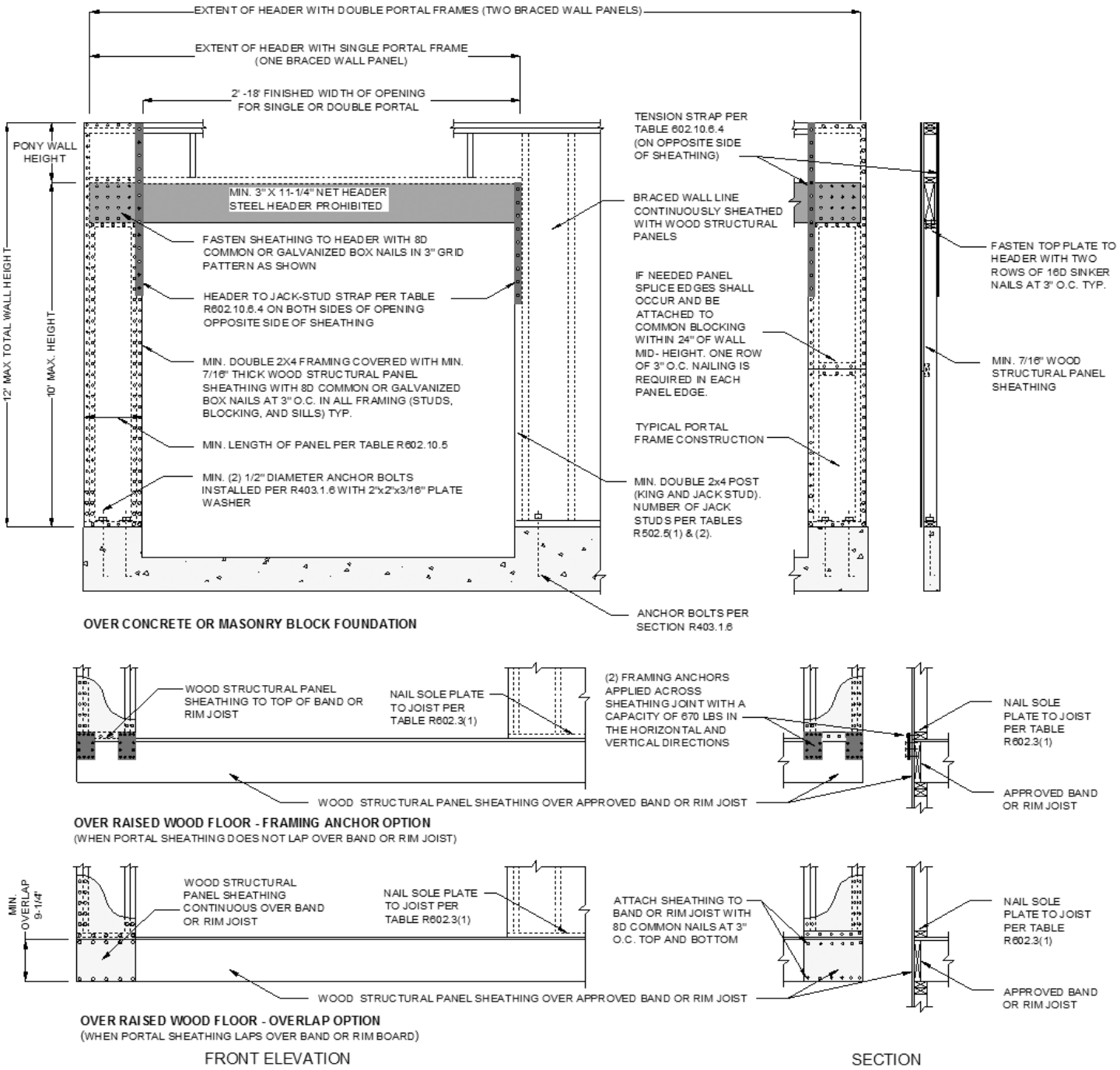

Figure R602.10.6.4
Continuous Sheathing Portal Frame Construction (Method CS-PF and CS-G)

Simplified wall bracing. Buildings meeting all of the conditions listed in items 1-8 shall be permitted to be braced in accordance with this section as an alternative to the requirements on the previous pages on wall bracing. The entire building shall be braced in accordance with this section; the use of other bracing provisions, except as specified herein, shall not be permitted to be mixed or used.

1. There shall be no more than two stories above the top of a concrete or masonry foundation or basement wall. Permanent wood foundations shall not be permitted.
2. Floors shall not cantilever more than 24 inches beyond the foundation or bearing wall below.
3. Wall height shall not be greater than 10 feet.
4. The building shall have a roof eave-to-ridge height of 15 feet or less.
5. All exterior walls shall have gypsum board with a minimum thickness of 1/2 inch installed on the interior side fastened in accordance with Table R702.3.5 in the wall covering section (page 61).
6. The structure shall be located where the basic wind speed is less than or equal to 90 mph, and the Exposure Category is A or B. (Madison meets this criteria)
7. The structure shall be located in Seismic Design Category A, B or C for detached one- and two-family dwellings or Seismic Design Category A or B for townhouses. (Madison meets criteria)
8. Cripple walls shall not be permitted in two-story buildings.

Circumscribed rectangle. The bracing required for each building shall be determined by circumscribing a rectangle around the entire building on each floor as shown in Figure R602.12.1. The rectangle shall surround all enclosed offsets and projections such as sunrooms and attached garages. Open structures, such as carports and decks, shall be permitted to be excluded. The rectangle shall have no side greater than 60 feet, and the ratio between the long side and short side shall be a maximum of 3:1.

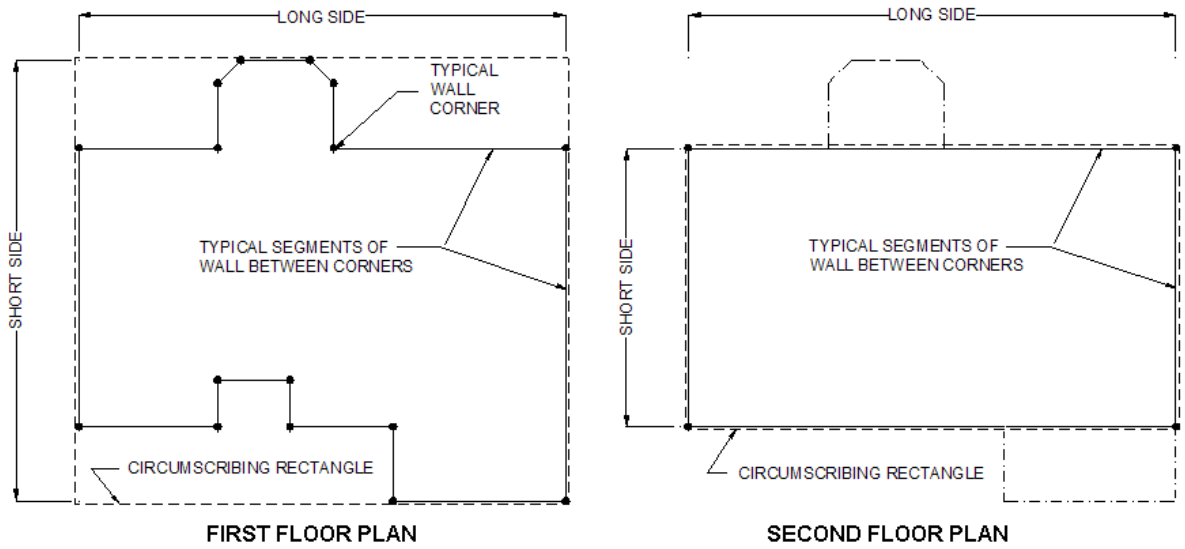

Figure R602.12.1

Sheathing materials. The following sheathing materials installed on the exterior side of exterior walls shall be used to construct a bracing unit as defined below. (Mixing materials is prohibited)

1. Wood structural panels with a minimum thickness of 3/8 inch fastened in accordance with Table R602.3(3) (page 38).
2. Structural fiberboard sheathing with a minimum thickness of 1/2 inch fastened in accordance with Table R602.3(1) (page 35-36)

Bracing unit. A bracing unit shall be a full height sheathed segment of the exterior wall with no openings or vertical or horizontal offsets and a minimum length as specified herein. Interior walls shall not contribute toward the amount of required bracing. (Again, Mixing of Items 1 and 2 is prohibited on the same story.)

1. Where all framed portions of all exterior walls are sheathed in accordance with the requirements above, including wall areas between bracing units, above and below openings and on gable end walls, the minimum length of a bracing unit shall be 3 feet
2. Where the exterior walls are braced with sheathing panels in accordance and areas between bracing units are covered with other materials, the minimum length of a bracing unit shall be 4 feet.

Multiple bracing units. Segments of wall compliant but longer than the minimum bracing unit length shall be considered as multiple bracing units. The number of bracing units shall be determined by dividing the wall segment length by the minimum bracing unit length. Full-height sheathed segments of wall narrower than the minimum bracing unit length shall not contribute toward a bracing unit.

Number of bracing units. Each side of the circumscribed rectangle, as shown in Figure R602.12.1, shall have, at a minimum, the number of bracing units in accordance with Table R602.12.4 placed on the parallel exterior walls facing the side of the rectangle. Bracing units shall then be placed using the distribution requirements specified as follows; A bracing unit shall begin no more than 12 feet
from any wall corner. The distance between adjacent edges of bracing units shall be no greater than 20 feet. Segments of wall greater than 8 feet in length shall have a minimum of one bracing unit.

TABLE R602.12.4
MINIMUM NUMBER OF BRACING UNITS ON EACH SIDE OF THE CIRCUMSCRIBED RECTANGLE

STORY LEVEL	EAVE-TO-RIDGE HEIGHT (feet)	MINIMUM NUMBER OF BRACING UNITS ON EACH LONG SIDE[a,b]						MINIMUM NUMBER OF BRACING UNITS ON EACH SHORT SIDE[a,b]					
		Length of short side (feet)[c]						Length of long side (feet)[c]					
		10	20	30	40	50	60	10	20	30	40	50	60
	10	1	2	2	2	3	3	1	2	2	2	3	3
		2	3	3	4	5	6	2	3	3	4	5	6
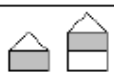	15	1	2	3	3	4	4	1	2	3	3	4	4
		2	3	4	5	6	7	2	3	4	5	6	7

For SI: 1 inch = 25.4 mm, 1 foot = 304.8 mm.
a. Interpolation shall not be permitted.
b. Cripple walls or wood-framed basement walls in a walk-out condition of a one-story structure shall be designed as the first floor of a two-story house.
c. Actual lengths of the sides of the circumscribed rectangle shall be rounded to the next highest unit of 10 when using this table.

For more on APA simplified wall bracing method, please also see APA system report SR-102B which explains the methodology at www.apawood.org

Wall Covering

This section will focus on the items and construction methods almost always seen in residential one and two family home construction settings – gypsum board on the interior, wood framed walls, and common exterior siding types. The interior wall covering section of the 2012 IRC has information on interior plaster, cement plaster, interior masonry veneer, and interior wood shakes and shingles. It also has sections dealing specifically with cold-formed steel framing in single family residential occupancies. Due to the fact that these items are rarely utilized locally, they are not included in this book. If you would like information about these, please contact the building official to discuss.

Interior Wall Covering:

Gypsum board. All gypsum board materials and accessories shall conform to ASTM standards and shall be installed in accordance with the provisions of this section. Adhesives for the installation of gypsum board shall conform to ASTM C 557.

TABLE R702.3.5
MINIMUM THICKNESS AND APPLICATION OF GYPSUM BOARD

THICKNESS OF GYPSUM BOARD (Inches)	APPLICATION	ORIENTATION OF GYPSUM BOARD TO FRAMING	MAXIMUM SPACING OF FRAMING MEMBERS (Inches o.c.)	MAXIMUM SPACING OF FASTENERS (Inches)		SIZE OF NAILS FOR APPLICATION TO WOOD FRAMING[c]
				Nails[a]	Screws[b]	
Application without adhesive						
$^3/_8$	Ceiling[d]	Perpendicular	16	7	12	13 gage, $1^1/_4$" long, $^{19}/_{64}$" head; 0.098" diameter, $1^1/_4$" long, annular-ringed; or 4d cooler nail, 0.080" diameter, $1^3/_8$" long, $^7/_{32}$" head.
	Wall	Either direction	16	8	16	
$^1/_2$	Ceiling	Either direction	16	7	12	13 gage, $1^3/_8$" long, $^{19}/_{64}$" head; 0.098" diameter, $1^1/_4$" long, annular-ringed; 5d cooler nail, 0.086" diameter, $1^5/_8$" long, $^{15}/_{64}$" head; or gypsum board nail, 0.086? diameter, $1^5/_8$" long, $^9/_{32}$" head.
	Ceiling[d]	Perpendicular	24	7	12	
	Wall	Either direction	24	8	12	
	Wall	Either direction	16	8	16	
$^5/_8$	Ceiling	Either direction	16	7	12	13 gage, $1^5/_8$" long, $^{19}/_{64}$" head; 0.098" diameter, $1^3/_8$" long, annular-ringed; 6d cooler nail, 0.092" diameter, $1^7/_8$" long, $^1/_4$" head; or gypsum board nail, 0.0915" diameter, $1^7/_8$" long, $^{19}/_{64}$" head.
	Ceiling[e]	Perpendicular	24	7	12	
	Wall	Either direction	24	8	12	
	Wall	Either direction	16	8	16	
Application with adhesive						
$^3/_8$	Ceiling[d]	Perpendicular	16	16	16	Same as above for $^3/_8$" gypsum board
	Wall	Either direction	16	16	24	
$^1/_2$ or $^5/_8$	Ceiling	Either direction	16	16	16	Same as above for $^1/_2$" and $^5/_8$" gypsum board, respectively
	Ceiling[d]	Perpendicular	24	12	16	
	Wall	Either direction	24	16	24	
Two $^3/_8$ layers	Ceiling	Perpendicular	16	16	16	Base ply nailed as above for $^1/_2$" gypsum board; face ply installed with adhesive
	Wall	Either direction	24	24	24	

For SI: 1 inch = 25.4 mm.

a. For application without adhesive, a pair of nails spaced not less than 2 inches apart or more than $2^1/_2$ inches apart may be used with the pair of nails spaced 12 inches on center.

b. Screws shall be in accordance with Section R702.3.6. Screws for attaching gypsum board to structural insulated panels shall penetrate the wood structural panel facing not less than $^7/_{16}$ inch.

c. Where cold-formed steel framing is used with a clinching design to receive nails by two edges of metal, the nails shall be not less than $^5/_8$ inch longer than the gypsum board thickness and shall have ringed shanks. Where the cold-formed steel framing has a nailing groove formed to receive the nails, the nails shall have barbed shanks or be 5d, $13^1/_2$ gage, $^{15}/_8$ inches long, $^{15}/_{64}$-inch head for $^1/_2$-inch gypsum board; and 6d, 13 gage, $1^7/_8$ inches long, $^{15}/_{64}$-inch head for $^5/_8$-inch gypsum board.

d. Three-eighths-inch-thick single-ply gypsum board shall not be used on a ceiling where a water-based textured finish is to be applied, or where it will be required to support insulation above a ceiling. On ceiling applications to receive a water-based texture material, either hand or spray applied, the gypsum board shall be applied perpendicular to framing. When applying a water-based texture material, the minimum gypsum board thickness shall be increased from $^3/_8$ inch to $^1/_2$ inch for 16-inch on center framing, and from $^1/_2$ inch to $^5/_8$ inch for 24-inch on center framing or $^1/_2$-inch sag-resistant gypsum ceiling board shall be used.

e. Type X gypsum board for garage ceilings beneath habitable rooms shall be installed perpendicular to the ceiling framing and shall be fastened at maximum 6 inches o.c. by minimum $1^7/_8$ inches 6d coated nails or equivalent drywall screws.

Wood framing. Wood framing supporting gypsum board shall not be less than 2 inches nominal thickness in the least dimension except that wood furring strips not less than 1-inch by 2-inch nominal dimension may be used over solid backing or framing spaced not more than 24 inches on center.

Cold-formed steel framing. Cold-formed steel framing supporting gypsum board shall not be less than 1-1/4 inches wide in the least dimension. Non load-bearing cold-formed steel framing shall comply with ASTM C 645. Load-bearing cold-formed steel framing and all cold- formed steel framing from 0.033 inch to 0.112 inch thick shall comply with ASTM C 955.

Water-resistant gypsum backing board. Gypsum board used as the base or backer for adhesive application of ceramic tile or other required nonabsorbent finish material shall conform to ASTM C 1396, C 1178 or C1278. Use of water-resistant gypsum backing board shall be permitted on ceilings where framing spacing does not exceed 12 inches on center for 1/2-inch-thick or 16 inches for 5/8-inch-thick gypsum board. Water-resistant gypsum board shall not be installed over a Class I or II vapor retarder in a shower or tub compartment. Cut or exposed edges, including those at wall intersections, shall be sealed as recommended by the manufacturer.
Limitations. Water resistant gypsum backing board shall not be used where there will be direct exposure to water, or in areas subject to continuous high humidity.

Ceramic tile: Ceramic tile surfaces shall be installed n accordance with ANSI standards. Fiber-cement, fiber mat reinforced cementitious backer units, glass mat gypsum backers or fiber-reinforced gypsum backers in compliance with ASTM C 1288, C 1325, C 1178 or C 1278, respectively, and installed in accordance with manufacturers' recommendations shall be used as backers for wall tile in tub and shower areas and wall panels in shower areas.

Vapor retarders. Class I or II vapor retarders are required on the interior side of frame walls.
Exceptions:
1. Basement walls.
2. Below grade portion of any wall.
3. Construction where moisture or its freezing will not damage the materials.

Class III vapor retarders. Class III vapor retarders shall be permitted where any one of the conditions are met.

- ✓ Vented cladding over fiberboard.
- ✓ Vented cladding over gypsum.
- ✓ Insulated sheathing with *R*-value ≥ 7.5 over 2 × 4 wall.
- ✓ Insulated sheathing with *R*-value ≥ 11.25 over 2 × 6 wall

Material vapor retarder class. The vapor retarder class shall be based on the manufacturer's certified testing or a tested assembly.
The following shall be deemed to meet the class specified:
Class I: Sheet polyethylene, unperforated aluminum foil.
Class II: Kraft-faced fiberglass batts.
Class III: Latex or enamel paint.

Exterior Wall Covering:

General. Exterior walls shall provide the building with a weather-resistant exterior wall envelope. The exterior wall envelope shall include flashing as described in this section.

Water resistance. The exterior wall envelope shall be designed and constructed in a manner that prevents the accumulation of water within the wall assembly by providing a water-resistant barrier behind the exterior veneer (see water-resistive barrier below) and a means of draining to the exterior water that enters the assembly. Protection against condensation in the exterior wall assembly shall be provided. The vapor retarder section under interior wall coverings on the previous page of this book also meets the requirements for exterior condensation protection.
Exceptions:
1. A weather-resistant exterior wall envelope shall not be required over concrete or masonry walls flashed according to the flashing section below.
2. Compliance with the requirements for a means of drainage, water resistance, and flashing, shall not be required for an exterior wall envelope that has been demonstrated to resist wind-driven rain through testing of the exterior wall envelope, including joints, penetrations and intersections with dissimilar materials, in accordance with ASTM E 331 under the following conditions:
   2.1. Exterior wall envelope test assemblies shall include at least one opening, one control joint, one wall/eave interface and one wall sill. All tested openings and penetrations shall be representative of the intended end-use configuration.
   2.2. Exterior wall envelope test assemblies shall be at least 4 feet by 8 feet in size.
   2.3. Exterior wall assemblies shall be tested at a minimum differential pressure of 6.24 pounds per square foot.
   2.4. Exterior wall envelope assemblies shall be subjected to the minimum test exposure for a minimum of 2 hours.

The exterior wall envelope design shall be considered to resist wind-driven rain where the results of testing indicate that water did not penetrate control joints in the exterior wall envelope, joints at the perimeter of openings penetration or intersections of terminations with dissimilar materials.

Water-resistive barrier. One layer of No. 15 asphalt felt, free from holes and breaks, complying with ASTM D226 for Type 1 felt or other approved water-resistive barrier shall be applied over studs or sheathing of all exterior walls. Such felt or material shall be applied horizontally, with the upper layer lapped over the lower layer not less than 2 inches. Where joints occur, felt shall be lapped not less than 6 inches. The felt or other approved material shall be continuous to the top of walls and terminated at penetrations and building appendages in a manner to meet the requirements of a true weather-resistant wall envelope.
Exception: Omission of the water-resistive barrier is permitted in the following situations:
1. In detached accessory buildings.
2. Under exterior wall finish materials as permitted in Table R703.4 (next page).
3. Under paperbacked stucco lath when the paper backing is an approved water-resistive barrier.

Attachments. Unless specified otherwise, all wall coverings shall be securely fastened in accordance with Table R703.4 (next two pages) or with other *approved* aluminum, stainless steel, zinc-coated or other *approved* corrosion-resistive fasteners.

TABLE R703.4
WEATHER-RESISTANT SIDING ATTACHMENT AND MINIMUM THICKNESS

SIDING MATERIAL		NOMINAL THICKNESS[a] (Inches)	JOINT TREATMENT	WATER-RESISTIVE BARRIER REQUIRED	TYPE OF SUPPORTS FOR THE SIDING MATERIAL AND FASTENERS[b, c, d]					
					Wood or wood structural panel sheathing into stud	Fiberboard sheathing into stud	Gypsum sheathing into stud	Foam plastic sheathing into stud	Direct to studs	Number or spacing of fasteners
Horizonal aluminum[e]	Without insulation	0.019[f] 0.024	Lap	Yes	0.120 nail $1^1/_2$″ long	0.120 nail 2″ long	0.120 nail 2″ long	0.120 nail[y]	Not allowed	Same as stud spacing
			Lap	Yes	0.120 nail $1^1/_2$″ long	0.120 nail 2″ long	0.120 nail 2″ long	0.120 nail[y]	Not allowed	
	With insulation	0.019	Lap	Yes	0.120 nail $1^1/_2$″ long	0.120 nail $2^1/_2$″ long	0.120 nail $2^1/_2$″ long	0.120 nail[y]	0.120 nail $1^1/_2$″ long	
Anchored veneer: brick, concrete, masonry or stone		2	Section R703	Yes	See Section R703 and Figure R703.7[g]					
Adhered veneer: concrete, stone or masonry[w]		—	Section R703	Yes Note w	See Section R703.6.1[g] or in accordance with the manufacturer's instructions.					
Hardboard[k] Panel siding-vertical		$^7/_{16}$	—	Yes	Note m	Note m	Note m	Note m	Note m	6″ panel edges 12″ inter. sup.[n]
Hardboard[k] Lap-siding-horizontal		$^7/_{16}$	Note p	Yes	Note o	Note o	Note o	Note o	Note o	Same as stud spacing 2 per bearing
Steel[h]		29 ga.	Lap	Yes	0.113 nail $1^3/_4$″ Staple-$1^3/_4$″	0.113 nail $2^3/_4$″ Staple-$2^1/_2$″	0.113 nail $2^1/_2$″ Staple-$2^1/_4$″	0.113 nail[v] Staple[v]	Not allowed	Same as stud spacing
Particleboard panels		$^3/_8$ - $^1/_2$	—	Yes	6d box nail (2″ × 0.099″)	6d box nail (2″ × 0.099″)	6d box nail (2″ × 0.099″)	box nail[v]	6d box nail (2″ × 0.099″), $^3/_8$ not allowed	6″ panel edge, 12″ inter. sup.
		$^5/_8$	—	Yes	6d box nail (2″ × 0.099″)	8d box nail ($2^1/_2$″ × 0.113″)	8d box nail ($2^1/_2$″ × 0.113″)	box nail[v]	6d box nail (2″" × 0.099″)	
Wood structural panel[i] ANSI/APA-PRP 210 siding[j] (exterior grade)		$^3/_8$ - $^1/_2$	Note p	Yes	0.099 nail-2″	0.113 nail-$2^1/_2$″	0.113 nail-$2^1/_2$″	0.113 nail[v]	0.099 nail-2″	6″ panel edges, 12″ inter. sup.
Wood structural panel lapsiding		$^3/_8$ - $^1/_2$	Note p Note x	Yes	0.099 nail-2″	0.113 nail-$2^1/_2$″	0.113 nail-$2^1/_2$″	0.113 nail[x]	0.099 nail-2″	8″ along bottom edge
Vinyl siding[l]		0.035	Lap	Yes	0.120 nail (shank) with a 0.313 head or 16-gage staple with $^3/_8$ to $^1/_2$-inch crown[y, z]	0.120 nail (shank) with a 0.313 head or 16-gage staple with $^3/_8$ to $^1/_2$-inch crown[y]	0.120 nail (shank) with a 0.313 head or 16-gage staple with $^3/_8$ to $^1/_2$-inch crown[y]	0.120 nail (shank) with a 0.313 head per Section R703.11.2	Not allowed	16 inches on center or specified by the manufacturer instructions or test report
Wood[l] rustic, drop	$^3/_8$ Min	Lap	Yes	Fastener penetration into stud-1″					0.113 nail-$2^1/_2$″ Staple-2″	Face nailing up to 6″ widths, 1 nail per bearing; 8″ widths and over, 2 nails per bearing

(continued)

TABLE R703.4—continued
WEATHER-RESISTANT SIDING ATTACHMENT AND MINIMUM THICKNESS

SIDING MATERIAL	NOMINAL THICKNESS[a] (Inches)	JOINT TREATMENT	WATER-RESISTIVE BARRIER REQUIRED	TYPE OF SUPPORTS FOR THE SIDING MATERIAL AND FASTENERS[b,c,d]					
				Wood or wood structural panel sheathing into stud	Fiberboard sheathing into stud	Gypsum sheathing into stud	Foam plastic sheathing into stud	Direct to studs	Number or spacing of fasteners
Shiplap	$^{19}/_{32}$ Average	Lap	Yes	Fastener penetration into stud-1″				0.113 nail-$2^1/_2$″ Staple-2″	Face nailing up to 6″ widths, 1 nail per bearing; 8″ widths and over, 2 nails per bearing
Bevel	$^7/_{16}$								
Butt tip	$^3/_{16}$	Lap	Yes						
Fibercement panel siding[g]	$^5/_{16}$	Note q	Yes Note u	6d common corrosion-resistant nail[r]	6d common corrosion-resistant nail[r]	6d common corrosion-resistant nail[r]	6d common corrosion-resistant nail[r, v]	4d common corrosion-resistant nail[r]	6″ o.c. on edges, 12″ o.c. on intermed. studs
Fibercement lap siding[g]	$^5/_{16}$	Note s	Yes Note u	6d common corrosion-resistant nail[r]	6d common corrosion-resistant nail[r]	6d common corrosion-resistant nail[r]	6d common corrosion-resistant nail[r, v]	6d common corrosion-resistant nail or 11-gage roofing nail[r]	Note t

For SI: 1 inch = 25.4 mm.

a. Based on stud spacing of 16 inches on center where studs are spaced 24 inches, siding shall be applied to sheathing approved for that spacing.
b. Nail is a general description and shall be T-head, modified round head, or round head with smooth or deformed shanks.
c. Staples shall have a minimum crown width of $^7/_{16}$-inch outside diameter and be manufactured of minimum 16-gage wire.
d. Nails or staples shall be aluminum, galvanized, or rust-preventative coated and shall be driven into the studs where fiberboard, gypsum, or foam plastic sheathing backing is used. Where wood or wood structural panel sheathing is used, fasteners shall be driven into studs unless otherwise permitted to be driven into sheathing in accordance with the siding manufacturer's installation instructions.
e. Aluminum nails shall be used to attach aluminum siding.
f. Aluminum (0.019 inch) shall be unbacked only when the maximum panel width is 10 inches and the maximum flat area is 8 inches. The tolerance for aluminum siding shall be +0.002 inch of the nominal dimension.
g. All attachments shall be coated with a corrosion-resistant coating.
h. Shall be of approved type.
i. Three-eighths-inch plywood shall not be applied directly to studs spaced more than 16 inches on center when long dimension is parallel to studs. Plywood $^1/_2$-inch or thinner shall not be applied directly to studs spaced more than 24 inches on center. The stud spacing shall not exceed the panel span rating provided by the manufacturer unless the panels are installed with the face grain perpendicular to the studs or over sheathing approved for that stud spacing.
j. Wood board sidings applied vertically shall be nailed to horizontal nailing strips or blocking set 24 inches on center. Nails shall penetrate $1^1/_2$ inches into studs, studs and wood sheathing combined or blocking.
k. Hardboard siding shall comply with CPA/ANSI A135.6.
l. Vinyl siding shall comply with ASTM D 3679.
m. Minimum shank diameter of 0.092 inch, minimum head diameter of 0.225 inch, and nail length must accommodate sheathing and penetrate framing $1^1/_2$ inches.
n. When used to resist shear forces, the spacing must be 4 inches at panel edges and 8 inches on interior supports.
o. Minimum shank diameter of 0.099 inch, minimum head diameter of 0.240 inch, and nail length must accommodate sheathing and penetrate framing $1^1/_2$ inches.
p. Vertical end joints shall occur at studs and shall be covered with a joint cover or shall be caulked.
q. See Section R703.10.1.
r. Fasteners shall comply with the nominal dimensions in ASTM F 1667.
s. See Section R703.10.2.
t. Face nailing: one 6d common nail through the over lap ping planks at each stud. Concealed nailing: one 11 gage $1^1/_2$ inch long galv. roofing nail through the top edge of each plank at each stud.
u. See Section R703.2 exceptions.
v. Minimum nail length must accommodate sheathing and penetrate framing $1^1/_2$ inches.
w. Adhered masonry veneer shall comply with the requirements of Section R703.6.3 and shall comply with the requirements in Sections 6.1 and 6.3 of TMS-402 ACI 530/ASCE 5.
x. Vertical joints, if staggered shall be permitted to be away from studs if applied over wood structural panel sheathing.
y. Minimum fastener length must accommodate sheathing and penetrate framing 0.75 inches or in accordance with the manufacturer's installation instructions.
z. Where approved by the manufacturer's instructions or test report siding shall be permitted to be installed with fasteners penetrating not less than 0.75 inches through wood or wood structural sheathing with or without penetration into the framing.

Wood, hardboard and wood structural panel siding.
Panel siding. Joints in wood, hardboard or wood structural panel siding shall be made as follows unless otherwise approved. Vertical joints in panel siding shall occur over framing members, unless wood or wood structural panel sheathing is used, and shall be ship lapped or covered with a batten. Horizontal joints in panel siding shall be lapped a minimum of 1 inch, shiplapped, or shall be flashed with Z-flashing and occur over solid blocking, wood or wood structural panel sheathing.
Horizontal siding. Horizontal lap siding shall be installed in accordance with the manufacturer's recommendations. Where there are no recommendations the siding shall be lapped a minimum of 1 inch, or 1/2 inch if rabbeted, and shall have the ends caulked, covered with a batten or sealed and installed over a strip of flashing.

Wood shakes and shingles. Wood shakes and shingles shall conform to CSSB *Grading Rules for Wood Shakes and Shingles.*
Application. Wood shakes or shingles shall be applied either single-course or double-course over nominal 1/2-inch wood-based sheathing or to furring strips over 1/2-inch nominal non wood sheathing .A permeable water-resistive barrier shall be provided overall sheathing, with horizontal overlaps in the membrane of not less than 2 inches and vertical overlaps of not less than 6 inches. Where furring strips are used, they shall be 1 inch by 3 inches or 1 inch by 4 inches and shall be fastened horizontally to the studs with 7d or 8d box nails and shall be spaced a distance on center equal to the actual weather exposure of the shakes or shingles, not to exceed the maximum exposure specified in Table R703.5.2.
The spacing between adjacent shingles to allow for expansion shall not exceed 1/4 inch, and between adjacent shakes, it shall not exceed 1/2 inch. The offset spacing between joints in adjacent courses shall be a minimum of 11/2 inches.
Weather exposure. The maximum weather exposure for shakes and shingles shall not exceed that specified in Table R703.5.2.

TABLE R703.5.2
MAXIMUM WEATHER EXPOSURE FOR WOOD SHAKES AND SHINGLES ON EXTERIOR WALLS[a, b, c]
(Dimensions are in inches)

LENGTH	EXPOSURE FOR SINGLE COURSE	EXPOSURE FOR DOUBLE COURSE
Shingles[a]		
16	$7^1/_2$	12[b]
18	$8^1/_2$	14[c]
24	$11^1/_2$	16
Shakes[a]		
18	$8^1/_2$	14
24	$11^1/_2$	18

For SI: 1 inch = 25.4 mm.
a. Dimensions given are for No. 1 grade.
b. A maximum 10-inch exposure is permitted for No. 2 grade.
c. A maximum 11-inch exposure is permitted for No. 2 grade.

Attachment. Each shake or shingle shall be held in place by two hot-dipped zinc-coated, stainless steel, or aluminum nails or staples. The fasteners shall be long enough to penetrate the sheathing or furring strips by a minimum of 1/2 inch and shall not be overdriven.
Bottom courses. The bottom courses shall be doubled.

Fiber cement siding. Panel siding. Panels shall be installed with the long dimension either parallel or perpendicular to framing. Vertical and horizontal joints shall occur over framing members and shall be sealed with caulking, covered with battens or shall be designed to comply with SectionR703.1. Panel siding shall be installed with fasteners according to Table R703.4 or *approved* manufacturer's installation instructions.
Lap siding. Lap siding shall be lapped a minimum of 1-1/4 inches and lap siding not having tongue-and-groove end joints shall have the ends sealed with caulking, installed with an H-section joint cover, located over a strip of flashing. Lap siding courses may be installed with the fastener heads exposed or concealed, according to this section or *approved* manufacturers' installation instructions.

Vinyl siding. Vinyl siding shall be certified and *labeled* as conforming to the requirements of ASTM D 3679 by an *approved* quality control agency. Vinyl siding, soffit and accessories shall be installed in accordance with the manufacturer's installation instructions.

Stone and masonry veneer, general. Stone and masonry veneer shall be installed in accordance with this chapter, Table R703.4 (page 64-65) and Figure R703.7 (next two pages). These veneers installed over a backing of wood or cold-formed steel shall be limited to the first *story* above-grade plane and shall not exceed 5 inches in thickness. Exterior masonry veneers having an installed weight of 40 pounds per square foot or less shall be permitted to be supported on wood or cold-formed steel construction. When masonry veneer supported by wood or cold-formed steel construction adjoins masonry veneer supported by the foundation, there shall be a movement joint between the veneer supported by the wood or cold-formed steel construction and the veneer supported by the foundation. The wood or cold-formed steel construction supporting the masonry veneer shall be designed to limit the deflection to1/600 of the span for the supporting members. The design of the wood or cold-formed steel construction shall consider the weight of the veneer and any other loads.
Support by steel angle. A minimum 6 inches by 4 inches by 5/16 inch steel angle, with the long leg placed vertically, shall be anchored to double 2 inches by 4 inches wood studs at a maximum on-center spacing of 16 inches. Anchorage of the steel angle at every double stud spacing shall be a minimum of two 7/16 inch diameter by 4 inch lag screws. The steel angle shall have a minimum clearance to underlying construction of 1/16 inch. A minimum of two-thirds the width of the masonry veneer thickness shall bear on the steel angle. Flashing and weep holes shall be located in the masonry veneer wythe in accordance with the figure below. The maximum height of masonry veneer above the steel angle support shall be 12 feet, 8 inches.

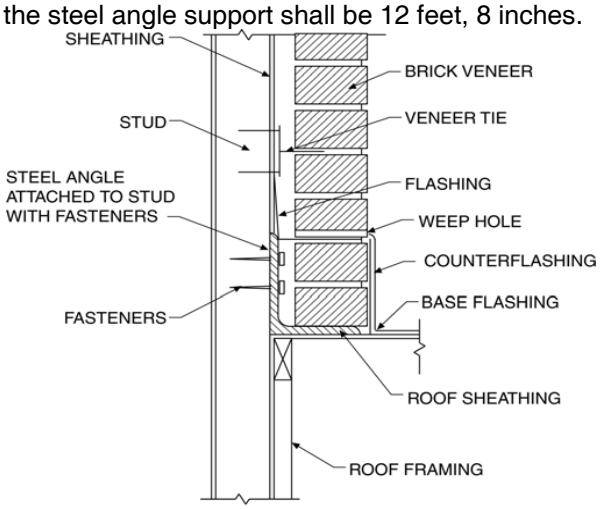

SUPPORT BY STEEL ANGLE

Support by roof construction. A steel angle shall be placed directly on top of the roof construction. The roof supporting construction for the steel angle shall consist of a minimum of three 2 inch by 6inch (51 mm by 152 mm) wood members. The wood member abutting the vertical wall stud construction shall be anchored with a minimum of three 5/8-inch diameter by 5-inch lag screws to every wood stud spacing. Each additional roof member shall be anchored by the use of two 10d nails at every wood stud spacing. A minimum of two-thirds the width of the masonry veneer thickness shall bear on the steel angle. Flashing and weep holes shall be located in the masonry veneer wythe in accordance with the figure below. The maximum height of the masonry veneer above the steel angle support shall be 12 feet, 8 inches. The air space separating the masonry veneer from the wood backing shall be in accordance with table R703.7.4. The support for the masonry veneer on wood construction shall be constructed in accordance with the figure below.

The maximum slope of the roof construction without stops shall be 7:12. Roof construction with slopes greater than 7:12 but not more than 12:12 shall have stops of a minimum 3 inch by 3 inch by 1/4 inch steel plate welded to the angle at 24 inches on center along the angle or as *approved* by the *building official*.

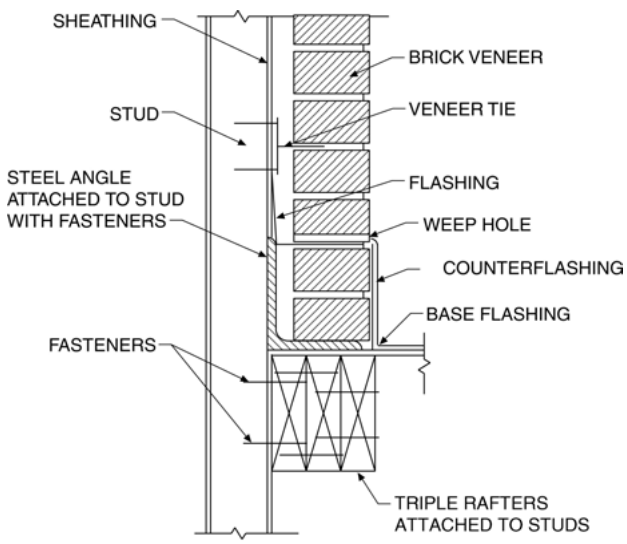

SUPPORT BY ROOF MEMBERS

TABLE R703.7.4
TIE ATTACHMENT AND AIR SPACE REQUIREMENTS

BACKING AND TIE	MINIMUM TIE	MINIMUM TIE FASTENER[a]	AIR SPACE	
Wood stud backing with corrugated sheet metal	22 U.S. gage (0.0299 in.) × $^7/_8$ in. wide	8d common nail [b] ($2^1/_2$ in. × 0.131 in.)	Nominal 1 in. between sheathing and veneer	
Wood stud backing with metal strand wire	W1.7 (No. 9 U.S. gage; 0.148 in.) with hook embedded in mortar joint	8d common nail [b] ($2^1/_2$ in. × 0.131 in.)	Minimum nominal 1 in. between sheathing and veneer	Maximum $4^1/_2$ in. between backing and veneer
Cold-formed steel stud backing with adjustable metal strand wire	W1.7 (No. 9 U.S. gage; 0.148 in.) with hook embedded in mortar joint	No. 10 screw extending through the steel framing a minimum of three exposed threads	Minimum nominal 1 in. between sheathing and veneer	Maximum $4^1/_2$ in. between backing and veneer

For SI: 1 inch = 25.4 mm.

a. In Seismic Design Category D_0, D_1 or D_2, the minimum tie fastener shall be an 8d ring-shank nail ($2^1/_2$ in. × 0.131 in.) or a No. 10 screw extending through the steel framing a minimum of three exposed threads.

b. All fasteners shall have rust-inhibitive coating suitable for the installation in which they are being used, or be manufactured from material not susceptible to corrosion.

Roof-Ceiling Construction

The wall construction section of the IRC is lengthy, so this next section is condensed to include the methods most often seen utilized in Madison and answer frequently asked questions. The following diagram shows where to look in the IRC for items. If you would like to look at the sections or if you have any questions please contact the building official or acquire your own copy of the IRC.

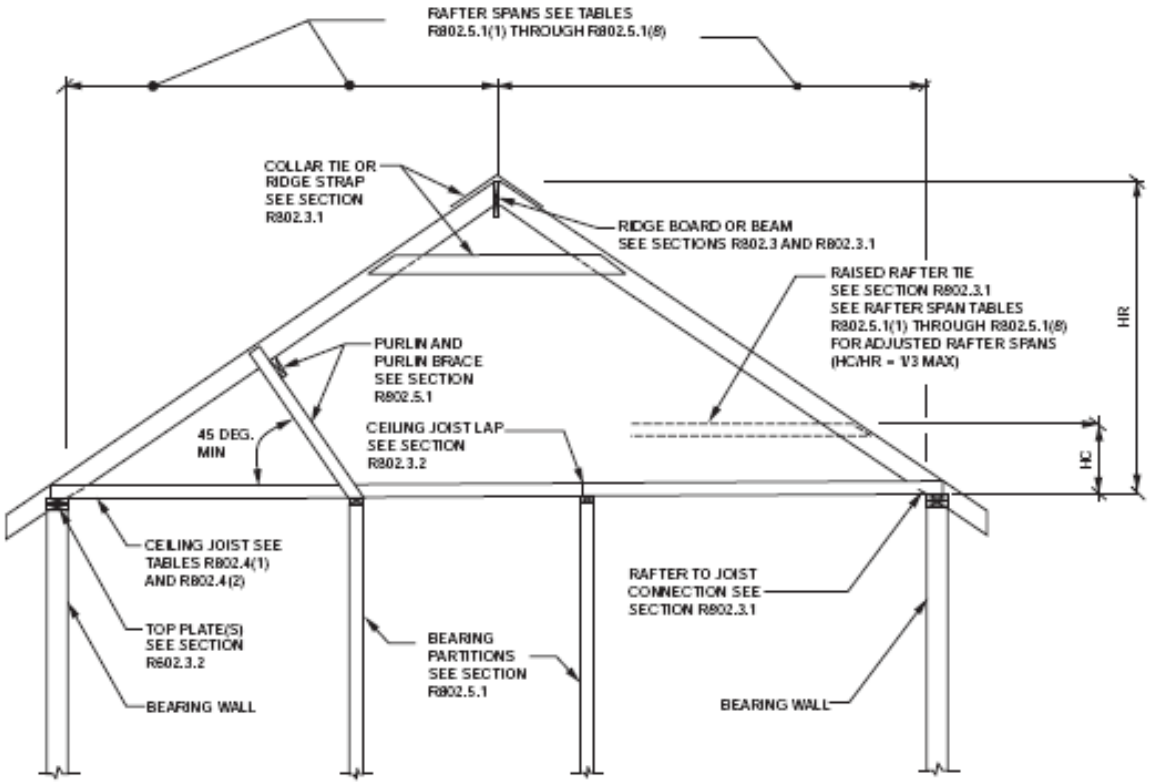

For SI: 1 inch = 25.4 mm, 1 foot = 305 mm, 1 degree = 0.018 rad.

Note: Where ceiling joists run perpendicular to the rafter, rafter ties shall be installed in accordance with Section R802.3.1.

H_c = Height of ceiling joists or rafter ties measured vertically above the top of rafter support walls.

H_r = Height of roof ridge measured vertically above the top of the rafter support walls.

FIGURE R802.5.1
BRACED RAFTER CONSTRUCTION

General. Roofs shall be designed for loads according to the structural design section of this book. Roof and ceiling construction shall be capable of accommodating all loads imposed and of transmitting the resulting loads to the supporting structural elements.

Roof drainage. All *dwellings* shall have a controlled method of water disposal from roofs that will collect and discharge roof drainage to the ground surface at least 5 feet from foundation walls or to an *approved* drainage system.

Identification. Load-bearing dimension lumber for rafters, trusses and ceiling joists shall be identified by a grade mark of a lumber grading or inspection agency that has been approved by an accreditation body that complies with DOC PS 20. In lieu of a grade mark, a certificate of

inspection issued by a lumber grading or inspection agency meeting the requirements of this section shall be accepted.

Ceiling Joist Spans. In addition to supporting ceiling materials, ceiling joists also serve as rafter ties to resist the outward thrust of the rafters at the top of the wall. It follows that the ceiling joist requires adequate connection to the rafter which is in turn fastened to the top of the wall. Maximum ceiling joist spans are provided for both attics with and without storage on the next four pages. For other grades and species and for other loading conditions, refer to the AF&PA *Span Tables for Joists and Rafters.* Attics with stair access or for storage above limited, require ceiling joists sized as floor joists. The ends of each rafter or ceiling joist shall have not less than 1-1/2 inches of bearing on wood or metal and not less than 3 inches on masonry or concrete.

TABLE R802.4(1)
CEILING JOIST SPANS FOR COMMON LUMBER SPECIES
(Uninhabitable attics without storage, live load = 10 psf, L/Δ = 240)

CEILING JOIST SPACING (Inches)	SPECIES AND GRADE		DEAD LOAD = 5 psf			
			2 × 4	2 × 6	2 × 8	2 × 10
			Maximum ceiling joist spans			
			(feet - inches)	(feet - inches)	(feet - inches)	(feet - inches)
12	Douglas fir-larch	SS	13-2	20-8	Note a	Note a
	Douglas fir-larch	#1	12-8	19-11	Note a	Note a
	Douglas fir-larch	#2	12-5	19-6	25-8	Note a
	Douglas fir-larch	#3	10-10	15-10	20-1	24-6
	Hem-fir	SS	12-5	19-6	25-8	Note a
	Hem-fir	#1	12-2	19-1	25-2	Note a
	Hem-fir	#2	11-7	18-2	24-0	Note a
	Hem-fir	#3	10-10	15-10	20-1	24-6
	Southern pine	SS	12-11	20-3	Note a	Note a
	Southern pine	#1	12-8	19-11	Note a	Note a
	Southern pine	#2	12-5	19-6	25-8	Note a
	Southern pine	#3	11-6	17-0	21-8	25-7
	Spruce-pine-fir	SS	12-2	19-1	25-2	Note a
	Spruce-pine-fir	#1	11-10	18-8	24-7	Note a
	Spruce-pine-fir	#2	11-10	18-8	24-7	Note a
	Spruce-pine-fir	#3	10-10	15-10	20-1	24-6
16	Douglas fir-larch	SS	11-11	18-9	24-8	Note a
	Douglas fir-larch	#1	11-6	18-1	23-10	Note a
	Douglas fir-larch	#2	11-3	17-8	23-0	Note a
	Douglas fir-larch	#3	9-5	13-9	17-5	21-3
	Hem-fir	SS	11-3	17-8	23-4	Note a
	Hem-fir	#1	11-0	17-4	22-10	Note a
	Hem-fir	#2	10-6	16-6	21-9	Note a
	Hem-fir	#3	9-5	13-9	17-5	21-3
	Southern pine	SS	11-9	18-5	24-3	Note a
	Southern pine	#1	11-6	18-1	23-1	Note a
	Southern pine	#2	11-3	17-8	23-4	Note a
	Southern pine	#3	10-0	14-9	18-9	22-2
	Spruce-pine-fir	SS	11-0	17-4	22-10	Note a
	Spruce-pine-fir	#1	10-9	16-11	22-4	Note a
	Spruce-pine-fir	#2	10-9	16-11	22-4	Note a
	Spruce-pine-fir	#3	9-5	13-9	17-5	21-3

(continued)

TABLE R802.4(1)—continued
CEILING JOIST SPANS FOR COMMON LUMBER SPECIES
(Uninhabitable attics without storage, live load = 10 psf, L/Δ = 240)

CEILING JOIST SPACING (Inches)	SPECIES AND GRADE		DEAD LOAD = 5 psf			
			2 × 4	2 × 6	2 × 8	2 × 10
			Maximum ceiling joist spans			
			(feet - inches)	(feet - inches)	(feet - inches)	(feet - inches)
19.2	Douglas fir-larch	SS	11-3	17-8	23-3	Note a
	Douglas fir-larch	#1	10-10	17-0	22-5	Note a
	Douglas fir-larch	#2	10-7	16-7	21-0	25-8
	Douglas fir-larch	#3	8-7	12-6	15-10	19-5
	Hem-fir	SS	10-7	16-8	21-11	Note a
	Hem-fir	#1	10-4	16-4	21-6	Note a
	Hem-fir	#2	9-11	15-7	20-6	25-3
	Hem-fir	#3	8-7	12-6	15-10	19-5
	Southern -pine	SS	11-0	17-4	22-10	Note a
	Southern pine	#1	10-10	17-0	22-5	Note a
	Southern pine	#2	10-7	16-8	21-11	Note a
	Southern pine	#3	9-1	13-6	17-2	20-3
	Spruce-pine-fir	SS	10-4	16-4	21-6	Note a
	Spruce-pine-fir	#1	10-2	15-11	21-0	25-8
	Spruce-pine-fir	#2	10-2	15-11	21-0	25-8
	Spruce-pine-fir	#3	8-7	12-6	15-10	19-5
24	Douglas fir-larch	SS	10-5	16-4	21-7	Note a
	Douglas fir-larch	#1	10-0	15-9	20-1	24-6
	Douglas fir-larch	#2	9-10	14-10	18-9	22-11
	Douglas fir-larch	#3	7-8	11-2	14-2	17-4
	Hem-fir	SS	9-10	15-6	20-5	Note a
	Hem-fir	#1	9-8	15-2	19-7	23-11
	Hem-fir	#2	9-2	14-5	18-6	22-7
	Hem-fir	#3	7-8	11-2	14-2	17-4
	Southern pine	SS	10-3	16-1	21-2	Note a
	Southern pine	#1	10-0	15-9	20-10	Note a
	Southern pine	#2	9-10	15-6	20-1	23-11
	Southern pine	#3	8-2	12-0	15-4	18-1
	Spruce-pine-fir	SS	9-8	15-2	19-11	25-5
	Spruce-pine-fir	#1	9-5	14-9	18-9	22-11
	Spruce-pine-fir	#2	9-5	14-9	18-9	22-11
	Spruce-pine-fir	#3	7-8	11-2	14-2	17-4

Check sources for availability of lumber in lengths greater than 20 feet.
For SI: 1 inch = 25.4 mm, 1 foot = 304.8 mm, 1 pound per square foot = 0.0479kPa.
a. Span exceeds 26 feet in length.

TABLE R802.4(2)
CEILING JOIST SPANS FOR COMMON LUMBER SPECIES
(Uninhabitable attics with limited storage, live load = 20 psf, L/Δ = 240)

CEILING JOIST SPACING (Inches)	SPECIES AND GRADE		DEAD LOAD = 10 psf			
			2 × 4	2 × 6	2 × 8	2 × 10
			Maximum ceiling joist spans			
			(feet - inches)	(feet - inches)	(feet - inches)	(feet - inches)
12	Douglas fir-larch	SS	10-5	16-4	21-7	Note a
	Douglas fir-larch	#1	10-0	15-9	20-1	24-6
	Douglas fir-larch	#2	9-10	14-10	18-9	22-11
	Douglas fir-larch	#3	7-8	11-2	14-2	17-4
	Hem-fir	SS	9-10	15-6	20-5	Note a
	Hem-fir	#1	9-8	15-2	19-7	23-11
	Hem-fir	#2	9-2	14-5	18-6	22-7
	Hem-fir	#3	7-8	11-2	14-2	17-4
	Southern pine	SS	10-3	16-1	21-2	Note a
	Southern pine	#1	10-0	15-9	20-10	Note a
	Southern pine	#2	9-10	15-6	20-1	23-11
	Southern pine	#3	8-2	12-0	15-4	18-1
	Spruce-pine-fir	SS	9-8	15-2	19-11	25-5
	Spruce-pine-fir	#1	9-5	14-9	18-9	22-11
	Spruce-pine-fir	#2	9-5	14-9	18-9	22-11
	Spruce-pine-fir	#3	7-8	11-2	14-2	17-4
16	Douglas fir-larch	SS	9-6	14-11	19-7	25-0
	Douglas fir-larch	#1	9-1	13-9	17-5	21-3
	Douglas fir-larch	#2	8-9	12-10	16-3	19-10
	Douglas fir-larch	#3	6-8	9-8	12-4	15-0
	Hem-fir	SS	8-11	14-1	18-6	23-8
	Hem-fir	#1	8-9	13-5	16-10	20-8
	Hem-fir	#2	8-4	12-8	16-0	19-7
	Hem-fir	#3	6-8	9-8	12-4	15-0
	Southern pine	SS	9-4	14-7	19-3	24-7
	Southern pine	#1	9-1	14-4	18-11	23-1
	Southern pine	#2	8-11	13-6	17-5	20-9
	Southern pine	#3	7-1	10-5	13-3	15-8
	Spruce-pine-fir	SS	8-9	13-9	18-1	23-1
	Spruce-pine-fir	#1	8-7	12-10	16-3	19-10
	Spruce-pine-fir	#2	8-7	12-10	16-3	19-10
	Spruce-pine-fir	#3	6-8	9-8	12-4	15-0

(continued)

TABLE R802.4(2)—continued
CEILING JOIST SPANS FOR COMMON LUMBER SPECIES
(Uninhabitable attics with limited storage, live load = 20 psf, L/Δ = 240)

CEILING JOIST SPACING (Inches)	SPECIES AND GRADE		DEAD LOAD = 10 psf			
			2 × 4	2 × 6	2 × 8	2 × 10
			Maximum ceiling joist spans			
			(feet - inches)	(feet - inches)	(feet - inches)	(feet - inches)
19.2	Douglas fir-larch	SS	8-11	14-0	18-5	23-4
	Douglas fir-larch	#1	8-7	12-6	15-10	19-5
	Douglas fir-larch	#2	8-0	11-9	14-10	18-2
	Douglas fir-larch	#3	6-1	8-10	11-3	13-8
	Hem-fir	SS	8-5	13-3	17-5	22-3
	Hem-fir	#1	8-3	12-3	15-6	18-11
	Hem-fir	#2	7-10	11-7	14-8	17-10
	Hem-fir	#3	6-1	8-10	11-3	13-8
	Southern pine	SS	8-9	13-9	18-1	23-1
	Southern pine	#1	8-7	13-6	17-9	21-1
	Southern pine	#2	8-5	12-3	15-10	18-11
	Southern pine	#3	6-5	9-6	12-1	14-4
	Spruce-pine-fir	SS	8-3	12-11	17-1	21-8
	Spruce-pine-fir	#1	8-0	11-9	14-10	18-2
	Spruce-pine-fir	#2	8-0	11-9	14-10	18-2
	Spruce-pine-fir	#3	6-1	8-10	11-3	13-8
24	Douglas fir-larch	SS	8-3	13-0	17-1	20-11
	Douglas fir-larch	#1	7-8	11-2	14-2	17-4
	Douglas fir-larch	#2	7-2	10-6	13-3	16-3
	Douglas fir-larch	#3	5-5	7-11	10-0	12-3
	Hem-fir	SS	7-10	12-3	16-2	20-6
	Hem-fir	#1	7-6	10-11	13-10	16-11
	Hem-fir	#2	7-1	10-4	13-1	16-0
	Hem-fir	#3	5-5	7-11	10-0	12-3
	Southern pine	SS	8-1	12-9	16-10	21-6
	Southern pine	#1	8-0	12-6	15-10	18-10
	Southern pine	#2	7-8	11-0	14-2	16-11
	Southern pine	#3	5-9	8-6	10-10	12-10
	Spruce-pine-fir	SS	7-8	12-0	15-10	19-5
	Spruce-pine-fir	#1	7-2	10-6	13-3	16-3
	Spruce-pine-fir	#2	7-2	10-6	13-3	16-3
	Spruce-pine-fir	#3	5-5	7-11	10-0	12-3

Check sources for availability of lumber in lengths greater than 20 feet.
For SI: 1 inch = 25.4 mm, 1 foot = 304.8 mm, 1 pound per square foot = 0.0479kPa.
a. Span exceeds 26 feet in length.

Rafter Spans. Spans for rafters shall be in accordance with the following rafter span tables. The span shall be measured along the horizontal projection of the rafter. For other grades and species and for other loading conditions, refer to the AF&PA Span Tables for Joists and Rafters. The ends of each rafter or ceiling joist shall have not less than 1-1/2 inches of bearing on wood or metal and not less than 3 inches on masonry or concrete.

TABLE R802.5.1(3)
RAFTER SPANS FOR COMMON LUMBER SPECIES
(Ground snow load=30 psf, ceiling not attached to rafters, L/Δ = 180)

RAFTER SPACING (Inches)	SPECIES AND GRADE		DEAD LOAD = 10 psf					DEAD LOAD = 20 psf				
			2 × 4	2 × 6	2 × 8	2 × 10	2 × 12	2 × 4	2 × 6	2 × 8	2 × 10	2 × 12
			Maximum rafter spans[a]									
			(feet - inches)	(feet - inches)	(feet - inches)	(feet - inches)	(feet - inches)	(feet - inches)	(feet - inches)	(feet - inches)	(feet - inches)	(feet - inches)
12	Douglas fir-larch	SS	10-0	15-9	20-9	Note b	Note b	10-0	15-9	20-1	24-6	Note b
	Douglas fir-larch	#1	9-8	14-9	18-8	22-9	Note b	9-0	13-2	16-8	20-4	23-7
	Douglas fir-larch	#2	9-5	13-9	17-5	21-4	24-8	8-5	12-4	15-7	19-1	22-1
	Douglas fir-larch	#3	7-1	10-5	13-2	16-1	18-8	6-4	9-4	11-9	14-5	16-8
	Hem-fir	SS	9-6	14-10	19-7	25-0	Note b	9-6	14-10	19-7	24-1	Note b
	Hem-fir	#1	9-3	14-4	18-2	22-2	25-9	8-9	12-10	16-3	19-10	23-0
	Hem-fir	#2	8-10	13-7	17-2	21-0	24-4	8-4	12-2	15-4	18-9	21-9
	Hem-fir	#3	7-1	10-5	13-2	16-1	18-8	6-4	9-4	11-9	14-5	16-8
	Southern pine	SS	9-10	15-6	20-5	Note b	Note b	9-10	15-6	20-5	Note b	Note b
	Southern pine	#1	9-8	15-2	20-0	24-9	Note b	9-8	14-10	18-8	22-2	Note b
	Southern pine	#2	9-6	14-5	18-8	22-3	Note b	9-0	12-11	16-8	19-11	23-4
	Southern pine	#3	7-7	11-2	14-3	16-10	20-0	6-9	10-0	12-9	15-1	17-11
	Spruce-pine-fir	SS	9-3	14-7	19-2	24-6	Note b	9-3	14-7	18-8	22-9	Note b
	Spruce-pine-fir	#1	9-1	13-9	17-5	21-4	24-8	8-5	12-4	15-7	19-1	22-1
	Spruce-pine-fir	#2	9-1	13-9	17-5	21-4	24-8	8-5	12-4	15-7	19-1	22-1
	Spruce-pine-fir	#3	7-1	10-5	13-2	16-1	18-8	6-4	9-4	11-9	14-5	16-8
16	Douglas fir-larch	SS	9-1	14-4	18-10	23-9	Note b	9-1	13-9	17-5	21-3	24-8
	Douglas fir-larch	#1	8-9	12-9	16-2	19-9	22-10	7-10	11-5	14-5	17-8	20-5
	Douglas fir-larch	#2	8-2	11-11	15-1	18-5	21-5	7-3	10-8	13-6	16-6	19-2
	Douglas fir-larch	#3	6-2	9-0	11-5	13-11	16-2	5-6	8-1	10-3	12-6	14-6
	Hem-fir	SS	8-7	13-6	17-10	22-9	Note b	8-7	13-6	17-1	20-10	24-2
	Hem-fir	#1	8-5	12-5	15-9	19-3	22-3	7-7	11-1	14-1	17-2	19-11
	Hem-fir	#2	8-0	11-9	14-11	18-2	21-1	7-2	10-6	13-4	16-3	18-10
	Hem-fir	#3	6-2	9-0	11-5	13-11	16-2	5-6	8-1	10-3	12-6	14-6
	Southern pine	SS	8-11	14-1	18-6	23-8	Note b	8-11	14-1	18-6	23-8	Note b
	Southern pine	#1	8-9	13-9	18-1	21-5	25-7	8-8	12-10	16-2	19-2	22-10
	Southern pine	#2	8-7	12-6	16-2	19-3	22-7	7-10	11-2	14-5	17-3	20-2
	Southern pine	#3	6-7	9-8	12-4	14-7	17-4	5-10	8-8	11-0	13-0	15-6
	Spruce-pine-fir	SS	8-5	13-3	17-5	22-1	25-7	8-5	12-9	16-2	19-9	22-10
	Spruce-pine-fir	#1	8-2	11-11	15-1	18-5	21-5	7-3	10-8	13-6	16-6	19-2
	Spruce-pine-fir	#2	8-2	11-11	15-1	18-5	21-5	7-3	10-8	13-6	16-6	19-2
	Spruce-pine-fir	#3	6-2	9-0	11-5	13-11	16-2	5-6	8-1	10-3	12-6	14-6
19.2	Douglas fir-larch	SS	8-7	13-6	17-9	21-8	25-2	8-7	12-6	15-10	19-5	22-6
	Douglas fir-larch	#1	7-11	11-8	14-9	18-0	20-11	7-1	10-5	13-2	16-1	18-8
	Douglas fir-larch	#2	7-5	10-11	13-9	16-10	19-6	6-8	9-9	12-4	15-1	17-6
	Douglas fir-larch	#3	5-7	8-3	10-5	12-9	14-9	5-0	7-4	9-4	11-5	13-2
	Hem-fir	SS	8-1	12-9	16-9	21-4	24-8	8-1	12-4	15-7	19-1	22-1
	Hem-fir	#1	7-9	11-4	14-4	17-7	20-4	6-11	10-2	12-10	15-8	18-2
	Hem-fir	#2	7-4	10-9	13-7	16-7	19-3	6-7	9-7	12-2	14-10	17-3
	Hem-fir	#3	5-7	8-3	10-5	12-9	14-9	5-0	7-4	9-4	11-5	13-2

(continued)

TABLE R802.5.1(3)—continued
RAFTER SPANS FOR COMMON LUMBER SPECIES
(Ground snow load=30 psf, ceiling not attached to rafters, L/Δ = 180)

RAFTER SPACING (Inches)	SPECIES AND GRADE		DEAD LOAD = 10 psf					DEAD LOAD = 20 psf				
			2 × 4	2 × 6	2 × 8	2 × 10	2 × 12	2 × 4	2 × 6	2 × 8	2 × 10	2 × 12
			Maximum rafter spans[a]									
			(feet - inches)	(feet - inches)	(feet - inches)	(feet - inches)	(feet - inches)	(feet - inches)	(feet - inches)	(feet - inches)	(feet - inches)	(feet - inches)
19.2	Southern pine	SS	8-5	13-3	17-5	22-3	Note b	8-5	13-3	17-5	22-0	25-9
	Southern pine	#1	8-3	13-0	16-6	19-7	23-4	7-11	11-9	14-9	17-6	20-11
	Southern pine	#2	7-11	11-5	14-9	17-7	20-7	7-1	10-2	13-2	15-9	18-5
	Southern pine	#3	6-0	8-10	11-3	13-4	15-10	5-4	7-11	10-1	11-11	14-2
	Spruce-pine-fir	SS	7-11	12-5	16-5	20-2	23-4	7-11	11-8	14-9	18-0	20-11
	Spruce-pine-fir	#1	7-5	10-11	13-9	16-10	19-6	6-8	9-9	12-4	15-1	17-6
	Spruce-pine-fir	#2	7-5	10-11	13-9	16-10	19-6	6-8	9-9	12-4	15-1	17-6
	Spruce-pine-fir	#3	5-7	8-3	10-5	12-9	14-9	5-0	7-4	9-4	11-5	13-2
24	Douglas fir-larch	SS	7-11	12-6	15-10	19-5	22-6	7-8	11-3	14-2	17-4	20-1
	Douglas fir-larch	#1	7-1	10-5	13-2	16-1	18-8	6-4	9-4	11-9	14-5	16-8
	Douglas fir-larch	#2	6-8	9-9	12-4	15-1	17-6	5-11	8-8	11-0	13-6	15-7
	Douglas fir-larch	#3	5-0	7-4	9-4	11-5	13-2	4-6	6-7	8-4	10-2	11-10
	Hem-fir	SS	7-6	11-10	15-7	19-1	22-1	7-6	11-0	13-11	17-0	19-9
	Hem-fir	#1	6-11	10-2	12-10	15-8	18-2	6-2	9-1	11-6	14-0	16-3
	Hem-fir	#2	6-7	9-7	12-2	14-10	17-3	5-10	8-7	10-10	13-3	15-5
	Hem-fir	#3	5-0	7-4	9-4	11-5	13-2	4-6	6-7	8-4	10-2	11-10
	Southern pine	SS	7-10	12-3	16-2	20-8	25-1	7-10	12-3	16-2	19-8	23-0
	Southern pine	#1	7-8	11-9	14-9	17-6	20-11	7-1	10-6	13-2	15-8	18-8
	Southern pine	#2	7-1	10-2	13-2	15-9	18-5	6-4	9-2	11-9	14-1	16-6
	Southern pine	#3	5-4	7-11	10-1	11-11	14-2	4-9	7-1	9-0	10-8	12-8
	Spruce-pine-fir	SS	7-4	11-7	14-9	18-0	20-11	7-1	10-5	13-2	16-1	18-8
	Spruce-pine-fir	#1	6-8	9-9	12-4	15-1	17-6	5-11	8-8	11-0	13-6	15-7
	Spruce-pine-fir	#2	6-8	9-9	12-4	15-1	17-6	5-11	8-8	11-0	13-6	15-7
	Spruce-pine-fir	#3	5-0	7-4	9-4	11-5	13-2	4-6	6-7	8-4	10-2	11-10

Check sources for availability of lumber in lengths greater than 20 feet.

For SI: 1 inch = 25.4 mm, 1 foot = 304.8 mm, 1 pound per square foot = 0.0479 kPa.

a. The tabulated rafter spans assume that ceiling joists are located at the bottom of the attic space or that some other method of resisting the outward push of the rafters on the bearing walls, such as rafter ties, is provided at that location. When ceiling joists or rafter ties are located higher in the attic space, the rafter spans shall be multiplied by the factors given below:

H_c/H_R	Rafter Span Adjustment Factor
1/3	0.67
1/4	0.76
1/5	0.83
1/6	0.90
1/7.5 or less	1.00

where:

H_c = Height of ceiling joists or rafter ties measured vertically above the top of the rafter support walls.

H_R = Height of roof ridge measured vertically above the top of the rafter support walls.

b. Span exceeds 26 feet in length.

TABLE R802.5.1(5)
RAFTER SPANS FOR COMMON LUMBER SPECIES
(Ground snow load=30 psf, ceiling attached to rafters, L/Δ = 240)

RAFTER SPACING (Inches)	SPECIES AND GRADE		DEAD LOAD = 10 psf					DEAD LOAD = 20 psf				
			2 × 4	2 × 6	2 × 8	2 × 10	2 × 12	2 × 4	2 × 6	2 × 8	2 × 10	2 × 12
			Maximum rafter spans[a]									
			(feet - inches)	(feet - inches)	(feet - inches)	(feet - inches)	(feet - inches)	(feet - inches)	(feet - inches)	(feet - inches)	(feet - inches)	(feet - inches)
12	Douglas fir-larch	SS	9-1	14-4	18-10	24-1	Note b	9-1	14-4	18-10	24-1	Note b
	Douglas fir-larch	#1	8-9	13-9	18-2	22-9	Note b	8-9	13-2	16-8	20-4	23-7
	Douglas fir-larch	#2	8-7	13-6	17-5	21-4	24-8	8-5	12-4	15-7	19-1	22-1
	Douglas fir-larch	#3	7-1	10-5	13-2	16-1	18-8	6-4	9-4	11-9	14-5	16-8
	Hem-fir	SS	8-7	13-6	17-10	22-9	Note b	8-7	13-6	17-10	22-9	Note b
	Hem-fir	#1	8-5	13-3	17-5	22-2	25-9	8-5	12-10	16-3	19-10	23-0
	Hem-fir	#2	8-0	12-7	16-7	21-0	24-4	8-0	12-2	15-4	18-9	21-9
	Hem-fir	#3	7-1	10-5	13-2	16-1	18-8	6-4	9-4	11-9	14-5	16-8
	Southern pine	SS	8-11	14-1	18-6	23-8	Note b	8-11	14-1	18-6	23-8	Note b
	Southern pine	#1	8-9	13-9	18-2	23-2	Note b	8-9	13-9	18-2	22-2	Note b
	Southern pine	#2	8-7	13-6	17-10	22-3	Note b	8-7	12-11	16-8	19-11	23-4
	Southern pine	#3	7-7	11-2	14-3	16-10	20-0	6-9	10-0	12-9	15-1	17-11
	Spruce-pine-fir	SS	8-5	13-3	17-5	22-3	Note b	8-5	13-3	17-5	22-3	Note b
	Spruce-pine-fir	#1	8-3	12-11	17-0	21-4	24-8	8-3	12-4	15-7	19-1	22-1
	Spruce-pine-fir	#2	8-3	12-11	17-0	21-4	24-8	8-3	12-4	15-7	19-1	22-1
	Spruce-pine-fir	#3	7-1	10-5	13-2	16-1	18-8	6-4	9-4	11-9	14-5	16-8
16	Douglas fir-larch	SS	8-3	13-0	17-2	21-10	Note b	8-3	13-0	17-2	21-3	24-8
	Douglas fir-larch	#1	8-0	12-6	16-2	19-9	22-10	7-10	11-5	14-5	17-8	20-5
	Douglas fir-larch	#2	7-10	11-11	15-1	18-5	21-5	7-3	10-8	13-6	16-6	19-2
	Douglas fir-larch	#3	6-2	9-0	11-5	13-11	16-2	5-6	8-1	10-3	12-6	14-6
	Hem-fir	SS	7-10	12-3	16-2	20-8	25-1	7-10	12-3	16-2	20-8	24-2
	Hem-fir	#1	7-8	12-0	15-9	19-3	22-3	7-7	11-1	14-1	17-2	19-11
	Hem-fir	#2	7-3	11-5	14-11	18-2	21-1	7-2	10-6	13-4	16-3	18-10
	Hem-fir	#3	6-2	9-0	11-5	13-11	16-2	5-6	8-1	10-3	12-6	14-6
	Southern pine	SS	8-1	12-9	16-10	21-6	Note b	8-1	12-9	16-10	21-6	Note b
	Southern pine	#1	8-0	12-6	16-6	21-1	25-7	8-0	12-6	16-2	19-2	22-10
	Southern pine	#2	7-10	12-3	16-2	19-3	22-7	7-10	11-2	14-5	17-3	20-2
	Southern pine	#3	6-7	9-8	12-4	14-7	17-4	5-10	8-8	11-0	13-0	15-6
	Spruce-pine-fir	SS	7-8	12-0	15-10	20-2	24-7	7-8	12-0	15-10	19-9	22-10
	Spruce-pine-fir	#1	7-6	11-9	15-1	18-5	21-5	7-3	10-8	13-6	16-6	19-2
	Spruce-pine-fir	#2	7-6	11-9	15-1	18-5	21-5	7-3	10-8	13-6	16-6	19-2
	Spruce-pine-fir	#3	6-2	9-0	11-5	13-11	16-2	5-6	8-1	10-3	12-6	14-6
19.2	Douglas fir-larch	SS	7-9	12-3	16-1	20-7	25-0	7-9	12-3	15-10	19-5	22-6
	Douglas fir-larch	#1	7-6	11-8	14-9	18-0	20-11	7-1	10-5	13-2	16-1	18-8
	Douglas fir-larch	#2	7-4	10-11	13-9	16-10	19-6	6-8	9-9	12-4	15-1	17-6
	Douglas fir-larch	#3	5-7	8-3	10-5	12-9	14-9	5-0	7-4	9-4	11-5	13-2
	Hem-fir	SS	7-4	11-7	15-3	19-5	23-7	7-4	11-7	15-3	19-1	22-1
	Hem-fir	#1	7-2	11-4	14-4	17-7	20-4	6-11	10-2	12-10	15-8	18-2
	Hem-fir	#2	6-10	10-9	13-7	16-7	19-3	6-7	9-7	12-2	14-10	17-3
	Hem-fir	#3	5-7	8-3	10-5	12-9	14-9	5-0	7-4	9-4	11-5	13-2

(continued)

TABLE R802.5.1(5)—continued
RAFTER SPANS FOR COMMON LUMBER SPECIES
(Ground snow load=30 psf, ceiling attached to rafters, L/Δ = 240)

RAFTER SPACING (Inches)	SPECIES AND GRADE		DEAD LOAD = 10 psf					DEAD LOAD = 20 psf				
			2 × 4	2 × 6	2 × 8	2 × 10	2 × 12	2 × 4	2 × 6	2 × 8	2 × 10	2 × 12
			Maximum rafter spans[a]									
			(feet - inches)	(feet - inches)	(feet - inches)	(feet - inches)	(feet - inches)	(feet - inches)	(feet - inches)	(feet - inches)	(feet - inches)	(feet - inches)
19.2	Southern pine	SS	7-8	12-0	15-10	20-2	24-7	7-8	12-0	15-10	20-2	24-7
	Southern pine	#1	7-6	11-9	15-6	19-7	23-4	7-6	11-9	14-9	17-6	20-11
	Southern pine	#2	7-4	11-5	14-9	17-7	20-7	7-1	10-2	13-2	15-9	18-5
	Southern pine	#3	6-0	8-10	11-3	13-4	15-10	5-4	7-11	10-1	11-11	14-2
	Spruce-pine-fir	SS	7-2	11-4	14-11	19-0	23-1	7-2	11-4	14-9	18-0	20-11
	Spruce-pine-fir	#1	7-0	10-11	13-9	16-10	19-6	6-8	9-9	12-4	15-1	17-6
	Spruce-pine-fir	#2	7-0	10-11	13-9	16-10	19-6	6-8	9-9	12-4	15-1	17-6
	Spruce-pine-fir	#3	5-7	8-3	10-5	12-9	14-9	5-0	7-4	9-4	11-5	13-2
24	Douglas fir-larch	SS	7-3	11-4	15-0	19-1	22-6	7-3	11-3	14-2	17-4	20-1
	Douglas fir-larch	#1	7-0	10-5	13-2	16-1	18-8	6-4	9-4	11-9	14-5	16-8
	Douglas fir-larch	#2	6-8	9-9	12-4	15-1	17-6	5-11	8-8	11-0	13-6	15-7
	Douglas fir-larch	#3	5-0	7-4	9-4	11-5	13-2	4-6	6-7	8-4	10-2	11-10
	Hem-fir	SS	6-10	10-9	14-2	18-0	21-11	6-10	10-9	13-11	17-0	19-9
	Hem-fir	#1	6-8	10-2	12-10	15-8	18-2	6-2	9-1	11-6	14-0	16-3
	Hem-fir	#2	6-4	9-7	12-2	14-10	17-3	5-10	8-7	10-10	13-3	15-5
	Hem-fir	#3	5-0	7-4	9-4	11-5	13-2	4-6	6-7	8-4	10-2	11-10
	Southern pine	SS	7-1	11-2	14-8	18-9	22-10	7-1	11-2	14-8	18-9	22-10
	Southern pine	#1	7-0	10-11	14-5	17-6	20-11	7-0	10-6	13-2	15-8	18-8
	Southern pine	#2	6-10	10-2	13-2	15-9	18-5	6-4	9-2	11-9	14-1	16-6
	Southern pine	#3	5-4	7-11	10-1	11-11	14-2	4-9	7-1	9-0	10-8	12-8
	Spruce-pine-fir	SS	6-8	10-6	13-10	17-8	20-11	6-8	10-5	13-2	16-1	18-8
	Spruce-pine-fir	#1	6-6	9-9	12-4	15-1	17-6	5-11	8-8	11-0	13-6	15-7
	Spruce-pine-fir	#2	6-6	9-9	12-4	15-1	17-6	5-11	8-8	11-0	13-6	15-7
	Spruce-pine-fir	#3	5-0	7-4	9-4	11-5	13-2	4-6	6-7	8-4	10-2	11-10

Check sources for availability of lumber in lengths greater than 20 feet.

For SI: 1 inch = 25.4 mm, 1 foot = 304.8 mm, 1 pound per square foot = 0.0479 kPa.

a. The tabulated rafter spans assume that ceiling joists are located at the bottom of the attic space or that some other method of resisting the outward push of the rafters on the bearing walls, such as rafter ties, is provided at that location. When ceiling joists or rafter ties are located higher in the attic space, the rafter spans shall be multiplied by the factors given below:

H_c/H_R	Rafter Span Adjustment Factor
1/3	0.67
1/4	0.76
1/5	0.83
1/6	0.90
1/7.5 or less	1.00

where:

H_c = Height of ceiling joists or rafter ties measured vertically above the top of the rafter support walls.

H_R = Height of roof ridge measured vertically above the top of the rafter support walls.

b. Span exceeds 26 feet in length.

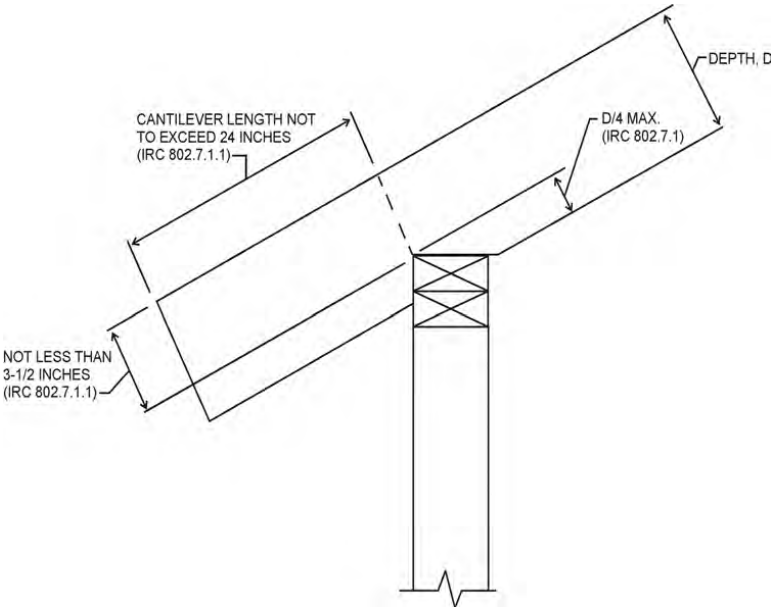

Rafter Notch Limits

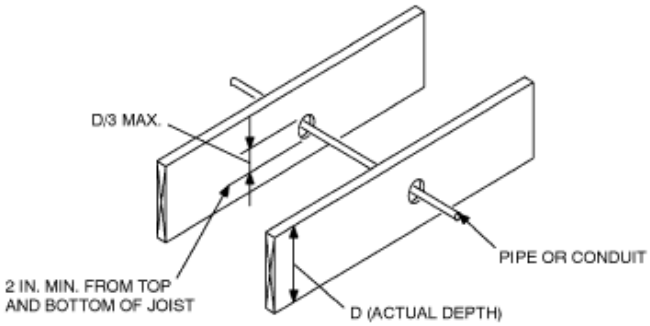

FIGURE R502.8
CUTTING, NOTCHING AND DRILLING

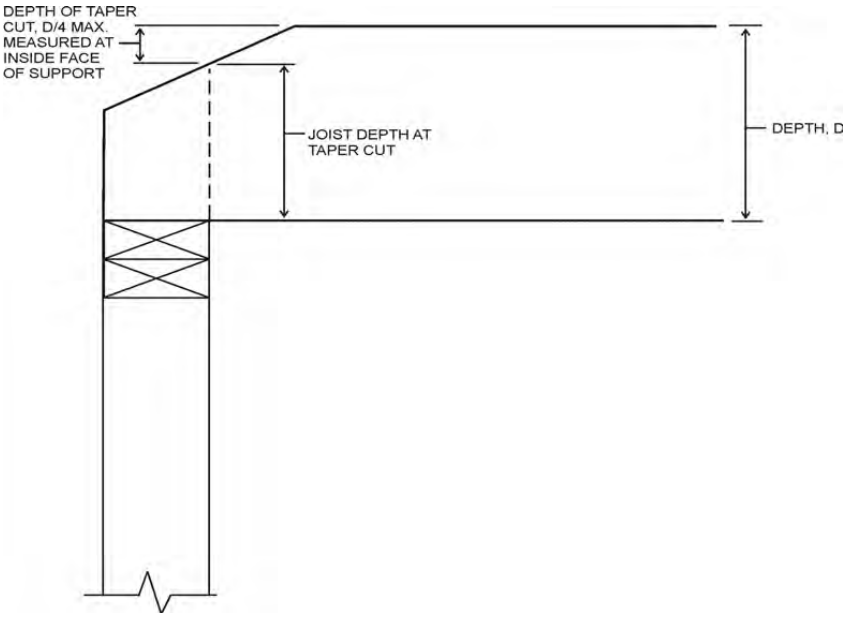

Ceiling Joist Taper Cut Limit

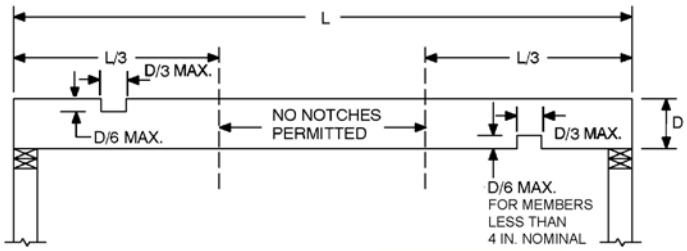

Cutting, drilling and notching. Structural roof members shall not be cut, bored or notched in excess of the limitations specified in this section.

Sawn lumber. Cuts, notches, and holes in solid lumber joists, rafters, blocking and beams shall comply with the provisions of these figures except that cantilevered portions of rafters shall be permitted in accordance with the next paragraph.

Cantilevered portions of rafters. Notches on cantilevered portions of rafters are permitted provided the dimension of the remaining portion of the rafter is not less than 3-1/2 inches and the length of the cantilever does not exceed 24 inches in accordance with the Rafter Notch Limits figure.

Ceiling joist taper cut. Taper cuts at the ends of the ceiling joist shall not exceed one-fourth the depth of the member in accordance with the Ceiling Joist Taper Cut Limit figure.

Engineered wood products. Cuts, notches and holes bored in trusses, structural composite lumber, structural glue-laminated members or I-joists are prohibited except where permitted by the manufacturer's recommendations or where the effects of such *alterations* are specifically considered in the design of the member by a registered *design professional*

Ceiling joist and rafter connections. Ceiling joists and rafters shall be nailed to each other in accordance with Table R802.5.1(9), and the rafter shall be nailed to the top wall plate in accordance with Table R602.3(1) on pages 35-36.

TABLE R802.5.1(9)
RAFTER/CEILING JOIST HEEL JOINT CONNECTIONS[a, b, c, d, e, f, h]

RAFTER SLOPE	RAFTER SPACING (Inches)	GROUND SNOW LOAD (psf)															
		20[g]				30				50				70			
		Roof span (feet)															
		12	20	28	36	12	20	28	36	12	20	28	36	12	20	28	36
		Required number of 16d common nails[a, b] per heel joint splices[c, d, e, f]															
3:12	12	4	6	8	10	4	6	8	11	5	8	12	15	6	11	15	20
	16	5	8	10	13	5	8	11	14	6	11	15	20	8	14	20	26
	24	7	11	15	19	7	11	16	21	9	16	23	30	12	21	30	39
4:12	12	3	5	6	8	3	5	6	8	4	6	9	11	5	8	12	15
	16	4	6	8	10	4	6	8	11	5	8	12	15	6	11	15	20
	24	5	8	12	15	5	9	12	16	7	12	17	22	9	16	23	29
5:12	12	3	4	5	6	3	4	5	7	3	5	7	9	4	7	9	12
	16	3	5	6	8	3	5	7	9	4	7	9	12	5	9	12	16
	24	4	7	9	12	4	7	10	13	6	10	14	18	7	13	18	23
7:12	12	3	4	4	5	3	3	4	5	3	4	5	7	3	5	7	9
	16	3	4	5	6	3	4	5	6	3	5	7	9	4	6	9	11
	24	3	5	7	9	3	5	7	9	4	7	10	13	5	9	13	17
9:12	12	3	3	4	4	3	3	3	4	3	3	4	5	3	4	5	7
	16	3	4	4	5	3	3	4	5	3	4	5	7	3	5	7	9
	24	3	4	6	7	3	4	6	7	3	6	8	10	4	7	10	13
12:12	12	3	3	3	3	3	3	3	3	3	3	3	4	3	3	4	5
	16	3	3	4	4	3	3	3	4	3	3	4	5	3	4	5	7
	24	3	4	4	5	3	3	4	6	3	4	6	8	3	6	8	10

For SI: 1 inch = 25.4 mm, 1 foot = 304.8 mm, 1 pound per square foot = 0.0479 kPa.

a. 40d box nails shall be permitted to be substituted for 16d common nails.

b. Nailing requirements shall be permitted to be reduced 25 percent if nails are clinched.

c. Heel joint connections are not required when the ridge is supported by a load-bearing wall, header or ridge beam.

d. When intermediate support of the rafter is provided by vertical struts or purlins to a load-bearing wall, the tabulated heel joint connection requirements shall be permitted to be reduced proportionally to the reduction in span.

e. Equivalent nailing patterns are required for ceiling joist to ceiling joist lap splices.

f. When rafter ties are substituted for ceiling joists, the heel joint connection requirement shall be taken as the tabulated heel joint connection requirement for two-thirds of the actual rafter slope.

g. Applies to roof live load of 20 psf or less.

h. Tabulated heel joint connection requirements assume that ceiling joists or rafter ties are located at the bottom of the attic space. When ceiling joists or rafter ties are located higher in the attic, heel joint connection requirements shall be increased by the following factors:

H_c/H_R	Heel Joint Connection Adjustment Factor
1/3	1.5
1/4	1.33
1/5	1.25
1/6	1.2
1/10 or less	1.11

where:

H_c = Height of ceiling joists or rafter ties measured vertically above the top of the rafter support walls.

H_R = Height of roof ridge measured vertically above the top of the rafter support walls.

(continued)
Where ceiling joists are not connected to the rafters at the top wall plate, joists connected higher in the *attic* shall be installed as rafter ties, or rafter ties shall be installed to provide a continuous tie. Where ceiling joists are not parallel to rafters, rafter ties shall be installed. Rafter ties shall be a minimum of 2 inches by 4 inches (nominal), installed in accordance with the connection requirements on the previous page, or connections of equivalent capacities shall be provided. Where ceiling joists or rafter ties are not provided, the ridge formed by these rafters shall be supported by a wall or girder designed in accordance with accepted engineering practice. Collar ties or ridge straps to resist wind uplift shall be connected in the upper third of the *attic* space. Collar ties shall be a minimum of 1 inch by 4 inches, spaced not more than 4 feet on center.

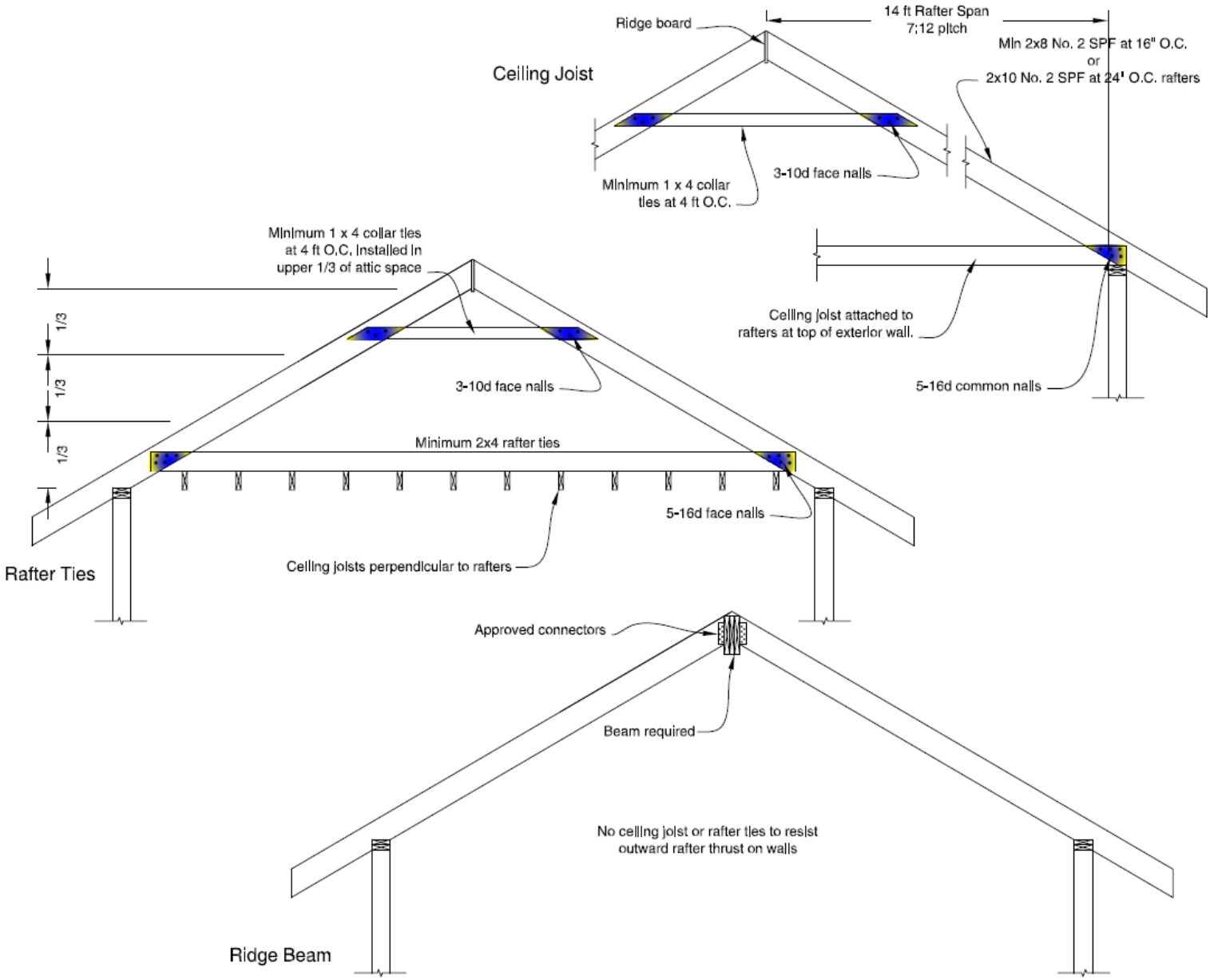

Framing of openings. Openings in roof and ceiling framing shall be framed with header and trimmer joists. When the header joist span does not exceed 4 feet, the header joist may be a single member the same size as the ceiling joist or rafter. Single trimmer joists may be used to carry a single header joist that is located within 3 feet of the trimmer joist bearing. When the header joist span exceeds 4 feet, the trimmer joists and the header joist shall be doubled and of sufficient cross section to support the ceiling joists or rafter framing into the header. *Approved* hangers shall be used for the header joist to trimmer joist connections when the header joist span exceeds 6 feet. Tail joists over 12 feet long shall be supported at the header by framing anchors or on ledger strips not less than 2 inches by 2 inches.

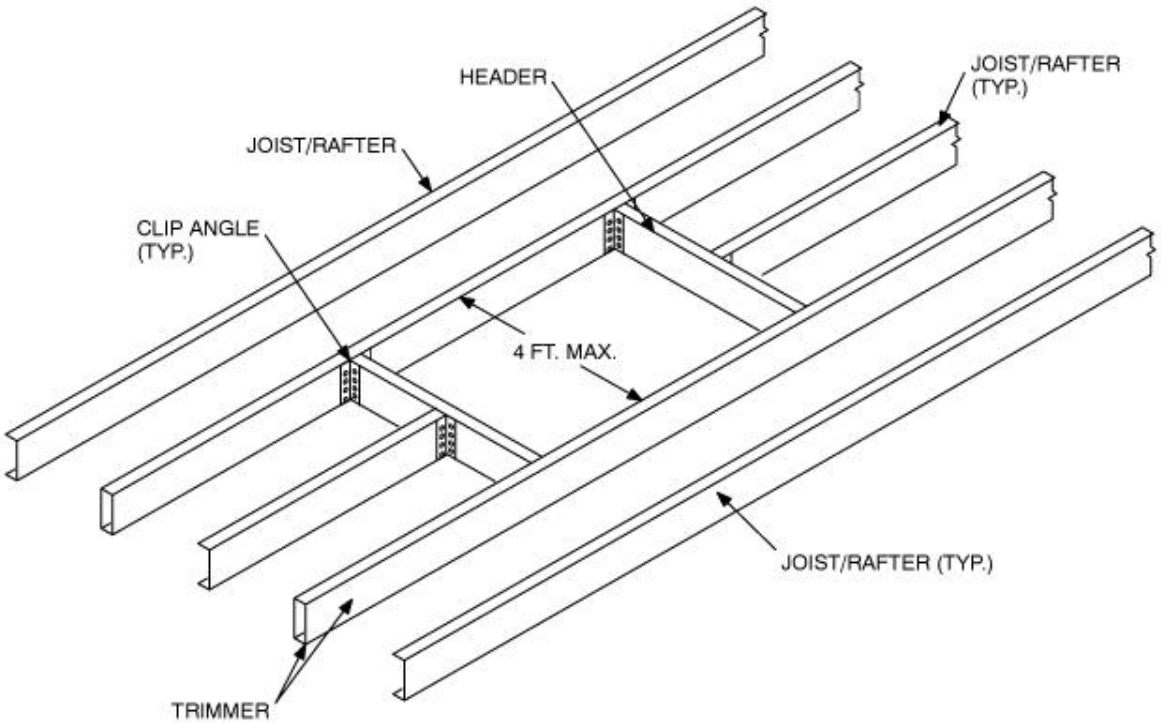

Roof sheathing. Allowable spans for lumber used as roof sheathing shall conform to Table R803.1.

TABLE R803.1
MINIMUM THICKNESS OF LUMBER ROOF SHEATHING

RAFTER OR BEAM SPACING (Inches)	MINIMUM NET THICKNESS (Inches)
24	$^5/_8$
48[a]	$1^1/_2$ T & G
60[b]	
72[c]	

Wood structural panel sheathing. Wood structural panels shall conform to DOC PS 1, DOC PS 2 and shall be identified for grade, bond classification, and Performance Category by a grade mark or certificate of inspection issued by an *approved* agency.

Roof tie-down.

Truss uplift resistance. Trusses shall be attached to supporting wall assemblies by connections capable of resisting uplift forces as specified on the truss design drawings. Uplift forces shall be permitted to be determined as specified by Table R802.11, if applicable, or as determined by accepted engineering practice.

Rafter uplift resistance. Individual rafters shall be attached to supporting wall assemblies by connections capable of resisting uplift forces as determined by Table R802.11 or as determined by accepted engineering practice. Connections for beams used in a roof system shall be designed in accordance with accepted engineering practice.

TABLE R802.11
RAFTER OR TRUSS UPLIFT CONNECTION FORCES FROM WIND (POUNDS PER CONNECTION)[a, b, c, d, e, f, g, h]

RAFTER OR TRUSS SPACING	ROOF SPAN (feet)	EXPOSURE B							
		Basic Wind Speed (mph)							
		85		90		100		110	
		Roof Pitch		Roof Pitch		Roof Pitch		Roof Pitch	
		< 5:12	≥ 5:12	< 5:12	≥ 5:12	< 5:12	≥ 5:12	< 5:12	≥ 5:12
12" o.c.	12	47	41	62	54	93	81	127	110
	18	59	51	78	68	119	104	165	144
	24	70	61	93	81	145	126	202	176
	28	77	67	104	90	163	142	227	197
	32	85	74	115	100	180	157	252	219
	36	93	81	126	110	198	172	277	241
	42	105	91	143	124	225	196	315	274
	48	116	101	159	138	251	218	353	307
16" o.c.	12	63	55	83	72	124	108	169	147
	18	78	68	103	90	159	138	219	191
	24	93	81	124	108	193	168	269	234
	28	102	89	138	120	217	189	302	263
	32	113	98	153	133	239	208	335	291
	36	124	108	168	146	264	230	369	321
	42	139	121	190	165	299	260	420	365
	48	155	135	212	184	335	291	471	410
24" o.c.	12	94	82	124	108	186	162	254	221
	18	117	102	155	135	238	207	329	286
	24	140	122	186	162	290	252	404	351
	28	154	134	208	181	326	284	454	395
	32	170	148	230	200	360	313	504	438
	36	186	162	252	219	396	345	554	482
	42	209	182	285	248	449	391	630	548
	48	232	202	318	277	502	437	706	614
RAFTER OR TRUSS SPACING	ROOF SPAN (feet)	EXPOSURE C							
		Basic Wind Speed (mph)							
		85		90		100		110	
		Roof Pitch		Roof Pitch		Roof Pitch		Roof Pitch	
		< 5:12	≥ 5:12	< 5:12	≥ 5:12	< 5:12	≥ 5:12	< 5:12	≥ 5:12
12" o.c.	12	94	82	114	99	157	137	206	179
	18	120	104	146	127	204	177	268	233
	24	146	127	179	156	251	218	330	287
	28	164	143	201	175	283	246	372	324
	32	182	158	224	195	314	273	414	360
	36	200	174	246	214	346	301	456	397
	42	227	197	279	243	394	343	520	452
	48	254	221	313	272	441	384	583	507

(continued)

TABLE R802.11—continued
RAFTER OR TRUSS UPLIFT CONNECTION FORCES FROM WIND (POUNDS PER CONNECTION)[a, b, c, d, e, f, g, h]

RAFTER OR TRUSS SPACING	ROOF SPAN (feet)	EXPOSURE C							
		Basic Wind Speed (mph)							
		85		90		100		110	
		Roof Pitch		Roof Pitch		Roof Pitch		Roof Pitch	
		< 5:12	≥ 5:12	< 5:12	≥ 5:12	< 5:12	≥ 5:12	< 5:12	≥ 5:12
16″ o.c.	12	125	109	152	132	209	182	274	238
	18	160	139	194	169	271	236	356	310
	24	194	169	238	207	334	291	439	382
	28	218	190	267	232	376	327	495	431
	32	242	211	298	259	418	364	551	479
	36	266	231	327	284	460	400	606	527
	42	302	263	372	324	524	456	691	601
	48	338	294	416	362	587	511	775	674
24″ o.c.	12	188	164	228	198	314	273	412	358
	18	240	209	292	254	408	355	536	466
	24	292	254	358	311	502	437	660	574
	28	328	285	402	350	566	492	744	647
	32	364	317	448	390	628	546	828	720
	36	400	348	492	428	692	602	912	793
	42	454	395	558	485	786	684	1040	905
	48	508	442	626	545	882	767	1166	1014

For SI: 1 inch = 25.4 mm, 1 foot = 304.8 mm, 1 mile per hour = 0.447 m/s, 1 pound = 0.454 kg, 1 pound per linear foot = 14.5 N/m.

a. The uplift connection forces are based on a maximum 33-foot mean roof height and Wind Exposure Category B or C. For Exposure D, the uplift connection force shall be selected from the Exposure C portion of the table using the next highest tabulated basic wind speed. The Adjustment Coefficients in Table R301.2(3) shall not be used to multiply the above forces for Exposures C and D or for other mean roof heights.

b. The uplift connection forces include an allowance for roof and ceiling assembly dead load of 15 psf.

c. The tabulated uplift connection forces are limited to a maximum roof overhang of 24 inches.

d. The tabulated uplift connection forces shall be permitted to be multiplied by 0.75 for connections not located within 8 feet of building corners.

e. For buildings with hip roofs with 5:12 and greater pitch, the tabulated uplift connection forces shall be permitted to be multiplied by 0.70. This reduction shall not be combined with any other reduction in tabulated forces.

f. For wall-to-wall and wall-to-foundation connections, the uplift connection force shall be permitted to be reduced by 60 plf for each full wall above.

g. Linear interpolation between tabulated roof spans and wind speeds shall be permitted.

h. The tabulated forces for a 12-inch on-center spacing shall be permitted to be used to determine the uplift load in pounds per linear foot.

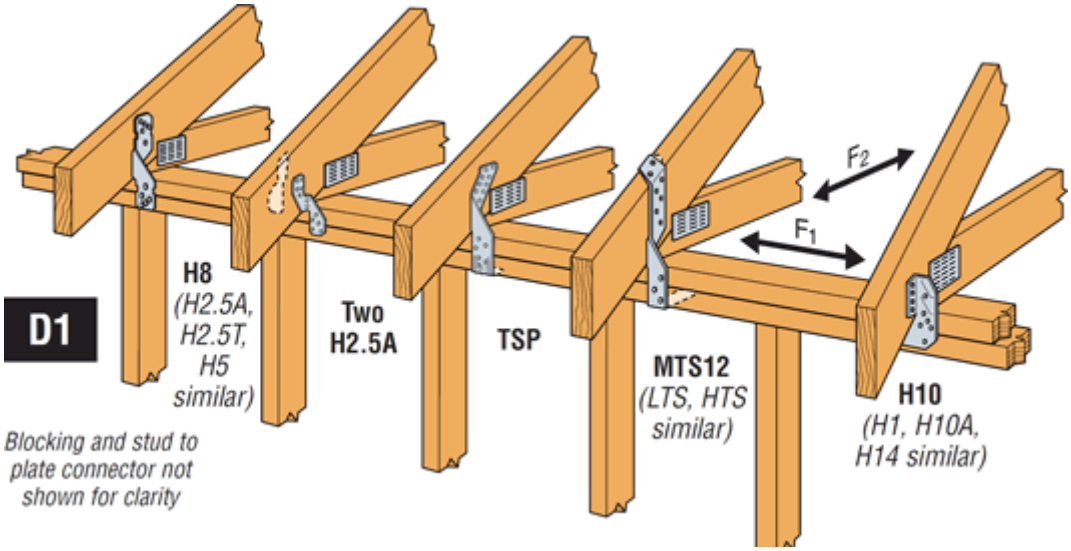

Wood trusses.
Truss design drawings. Truss design drawings shall be provided to the building official and approved prior to installation. Truss design drawings shall include, at a minimum, the information specified below. Truss design drawings shall be provided with the shipment of trusses delivered to the jobsite.
1. Slope or depth, span and spacing.
2. Location of all joints.
3. Required bearing widths.
4. Design loads as applicable.
4.1. Top chord live load (as determined from Section R301.6).
4.2. Top chord dead load.
4.3. Bottom chord live load.
4.4. Bottom chord dead load.
4.5. Concentrated loads and their points of application.
4.6. Controlling wind and earthquake loads.
5. Adjustments to lumber and joint connector design values for conditions of use.
6. Each reaction force and direction.
7. Joint connector type and description (e.g., size, thickness or gage) and the dimensioned location of each joint connector except where symmetrically located relative to the joint interface.
8. Lumber size, species and grade for each member.
9. Connection requirements for:
9.1. Truss to girder-truss.
9.2. Truss ply to ply.
9.3. Field splices.
10. Calculated deflection ratio and/or maximum description for live and total load.
11. Maximum axial compression forces in the truss members to enable the building designer to design the size, connections and anchorage of the permanent continuous lateral bracing. Forces shall be shown on the truss design drawing or on supplemental documents.
12. Required permanent truss member bracing location.

Design. Wood trusses shall be designed in accordance with accepted engineering practice. The design and manufacture of metal-plate-connected wood trusses shall comply with ANSI/TPI 1. The truss design drawings shall be prepared by a registered professional.

Applicability limits. The provisions of the prescriptive section of the IRC controls the design of truss roof framing when snow controls for buildings not greater than 60 feet in length perpendicular to the joist, rafter or truss span, not greater than 36 feet in width parallel to the joist, rafter or truss span, not more than three stories above *grade plane* in height, and roof slopes not smaller than 3:12 (25 percent slope) or greater than 12:12 (100 percent slope).

Bracing. Trusses shall be braced to prevent rotation and provide lateral stability in accordance with the requirements specified in the *construction documents* for the building and on the individual truss design drawings. In the absence of specific bracing requirements, trusses shall be braced in accordance with accepted industry practice such as the SBCA *Building Component Safety Information(BCSI) Guide to Good Practice for Handling, Installing & Bracing of Metal Plate Connected Wood Trusses*.

Alterations to trusses. Truss members shall not be cut, notched, drilled, spliced or otherwise altered in any way without the approval of a registered *design professional*

Ventilation: Enclosed *attics* and enclosed rafter spaces formed where ceilings are applied directly to the underside of roof rafters shall have cross ventilation for each separate space by ventilating openings protected against the entrance of rain or snow. Ventilation openings shall have a least dimension of 1/16 inch minimum and 1/4 inch maximum. Ventilation openings having a least dimension larger than 1/4 inch shall be provided with corrosion-resistant wire cloth screening, hardware cloth, or similar material with openings having a least dimension of 1/16 inch minimum and 1/4 inch maximum. Required ventilation openings shall open directly to the outside air.
Minimum vent area. The minimum net free ventilating area shall be 1/150 of the area of the vented space.
Exception: The minimum net free ventilation area shall be 1/300 of the vented space provided one or more of the following conditions are met:
1. A Class I or II vapor retarder is installed on the warm-in-winter side of the ceiling.
2. At least 40 percent and not more than 50 percent of the required ventilating area is provided by ventilators located in the upper portion of the attic or rafter space. Upper ventilators shall be located no more than 3 feet below the ridge or highest point of the space, measured vertically, with the balance of the required ventilation provided by eave or cornice vents. Where the location of wall or roof framing members conflicts with the installation of upper ventilators, installation more than 3 feet below the ridge or highest point of the space shall be permitted.
Vent and insulation clearance. Where eave or cornice vents are installed, insulation shall not block the free flow of air. A minimum of a 1-inch space shall be provided between the insulation and the roof sheathing and at the location of the vent.
Installation and weather protection. Ventilators shall be installed in accordance with manufacturer's installation instructions.

Attic access. Buildings with combustible ceiling or roof construction shall have an *attic* access opening to *attic* areas that exceed 30 square feet and have a vertical height of 30 inches or greater. The vertical height shall be measured from the top of the ceiling framing members to the underside of the roof framing members. The rough-framed opening shall not be less than 22 inches by 30 inches and shall be located in a hallway or other readily accessible location. When located in a wall, the opening shall be a minimum of 22 inches wide by 30 inches high. When the access is located in a ceiling, minimum unobstructed headroom in the *attic* space shall be 30 inches at some point above the access measured vertically from the bottom of ceiling framing members.

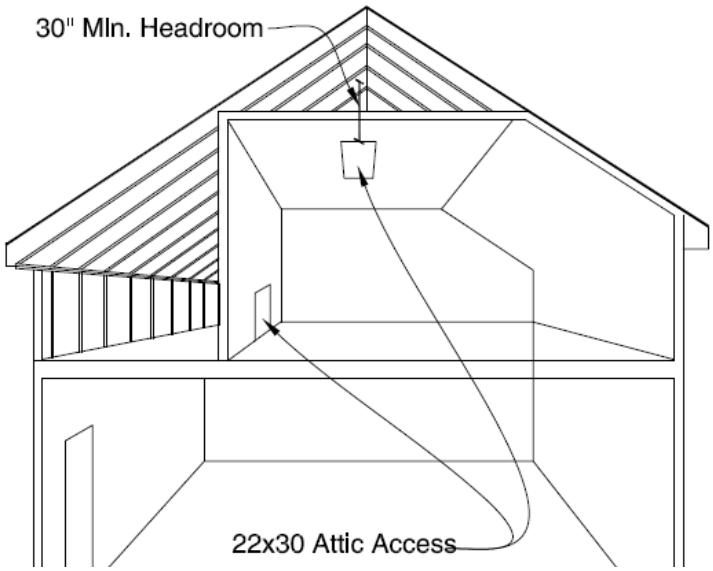

Roof Assemblies

General. Roof decks shall be covered with approved roof coverings secured to the building or structure in accordance with the provisions of this section. Roof assemblies shall be designed and installed in accordance with the 2012 IRC and/or the approved manufacturer's installation instructions such that the roof assembly shall serve to protect the building or structure.

Flashing. Flashings shall be installed in a manner that prevents moisture from entering the wall and roof through joints in copings, through moisture permeable materials and at intersections with parapet walls and other penetrations through the roof plane.
Locations. Flashings shall be installed at wall and roof intersections, wherever there is a change in roof slope or direction and around roof openings. A flashing shall be installed to divert the water away from where the eave of a sloped roof intersects a vertical sidewall. Where flashing is of metal, the metal shall be corrosion resistant with a thickness of not less than No. 26 galvanized sheet.

Asphalt shingles. The installation of asphalt shingles shall comply with the provisions of this section.
Sheathing requirements**.** Asphalt shingles shall be fastened to solidly sheathed decks.
Slope. Asphalt shingles shall be used only on roof slopes of two units vertical in 12 units horizontal (2:12) or greater. For roof slopes from two units vertical in 12 units horizontal (2:12) up to four units vertical in 12 units horizontal (4:12), double underlayment application is required.
Underlayment. Required underlayment shall conform to ASTM D 226 Type I, ASTM D 4869 Type I, or ASTM D 6757. Self-adhering polymer modified bitumen sheet shall comply with ASTM D 1970.
Asphalt shingles. Asphalt shingles shall comply with ASTM D 225 or D 3462.
Wind resistance of asphalt shingles. Asphalt shingles shall be tested in accordance with ASTM D 7158. Asphalt shingles shall meet the classification requirements of Table R905.2.4.1(1) for the appropriate maximum basic wind speed. Asphalt shingle packaging shall bear a *label* to indicate compliance with ASTM D 7158 and the required classification in Table R905.2.4.1(1).

TABLE R905.2.4.1(1)
CLASSIFICATION OF ASPHALT ROOF SHINGLES PER ASTM D 7158

MAXIMUM BASIC WIND SPEED FROM FIGURE 301.2(4)A (mph)	CLASSIFICATION REQUIREMENT
85	D, G or H
90	D, G or H
100	G or H
110	G or H
120	G or H
130	H
140	H
150	H

For SI:1 mile per hour = 0.447 m/s.

Exception: Asphalt shingles not included in the scope of ASTM D 7158 shall be tested and *labeled* to indicate compliance with ASTM D 3161 and the required classification in Table R905.2.4.1(2).

TABLE R905.2.4.1(2)
CLASSIFICATION OF ASPHALT SHINGLES PER ASTM D 3161

MAXIMUM BASIC WIND SPEED FROM FIGURE 301.2(4)A (mph)	CLASSIFICATION REQUIREMENT
85	A, D or F
90	A, D or F
100	A, D or F
110	F
120	F
130	F
140	F
150	F

For SI: 1 mile per hour = 0.447 m/s.

(continued)

Fasteners. Fasteners for asphalt shingles shall be galvanized steel, stainless steel, aluminum or copper roofing nails, minimum 12 gage [0.105 inch (3 mm)]shank with a minimum 3/8-inch-diameter head, ASTM F 1667, of a length to penetrate through the roofing materials and a minimum of 3/4 inch into the roof sheathing. Where the roof sheathing is less than 3/4 inch thick, the fasteners shall penetrate through the sheathing. Fasteners shall comply with ASTM F 1667.

Attachment. Asphalt shingles shall have the minimum number of fasteners required by the manufacturer, but not less than four fasteners per strip shingle or two fasteners per individual shingle. Where the roof slope exceeds 21 units vertical in 12 units horizontal, shingles shall be installed as required by the manufacturer.

Underlayment application. For roof slopes from two units vertical in 12 units horizontal, up to four units vertical in 12 units horizontal, underlayment shall be two layers applied in the following manner. Apply a 19-inch strip of underlayment felt parallel to and starting at the eaves, fastened sufficiently to hold in place. Starting at the eave, apply 36-inch-wide sheets of underlayment, overlapping successive sheets 19 inches, and fastened sufficiently to hold in place. Distortions in the underlayment shall not interfere with the ability of the shingles to seal. For roof slopes of four units vertical in 12 units horizontal or greater, underlayment shall be one layer applied in the following manner. Underlayment shall be applied shingle fashion, parallel to and starting from the eave and lapped 2 inches, fastened sufficiently to hold in place. Distortions in the underlayment shall not interfere with the ability of the shingles to seal. End laps shall be offset by 6 feet.

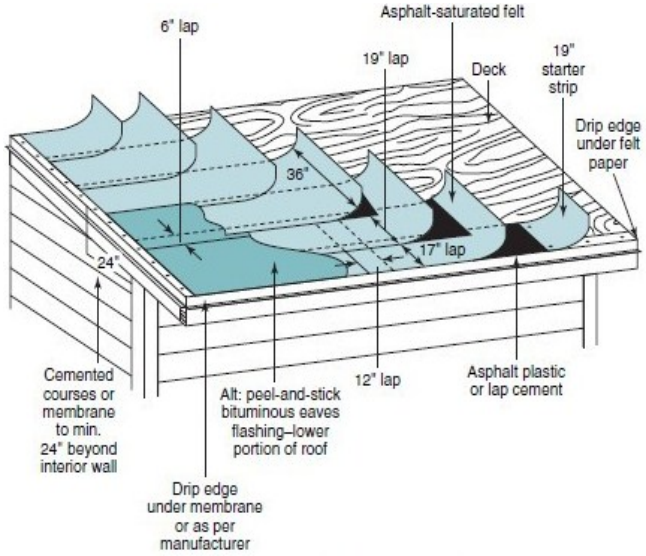

Underlayment 2-4 Units vertical in 12 horizontal

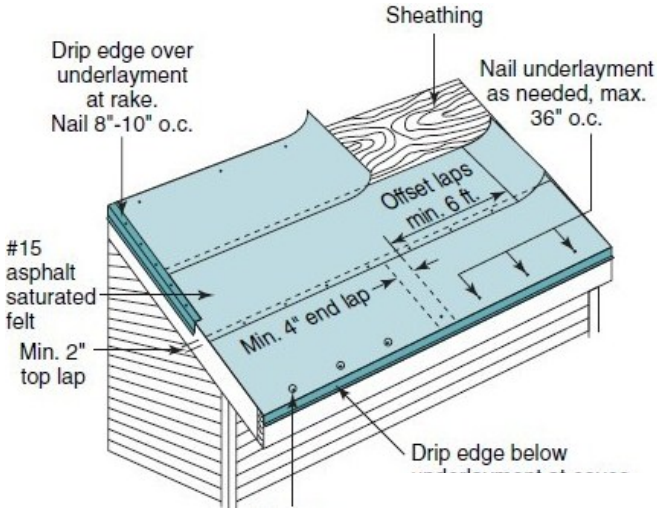

Underlayment for slopes 4 units vertical in 12 units horizontal or greater

Valleys. Valley linings shall be installed in accordance with the manufacturer's installation instructions before applying shingles. Valley linings of the following types shall be permitted:

1. For open valleys (valley lining exposed) lined with metal, the valley lining shall be at least 24 inches wide and of any of the corrosion-resistant metals in Table R905.2.8.2 on the next page.
2. For open valleys, valley lining of two plies of mineral surfaced roll roofing, complying with ASTM D 3909 or ASTM D 6380 Class M, shall be permitted. The bottom layer shall be 18 inches and the top layer a minimum of 36 inches wide.
3. For closed valleys (valley covered with shingles), valley lining of one ply of smooth roll roofing and at least 36 inches wide or valley lining as described in Item 1 or 2 above shall be permitted. Self-adhering polymer modified bitumen underlayment shall be permitted in lieu of the lining material.

The following are National Roofing Contractors Association examples of the types of valley flashing. Materials allowed by this section can be utilized in place of these specific examples.

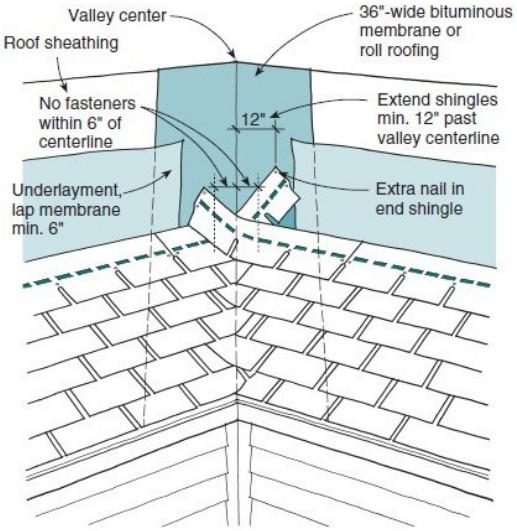

Woven Valley

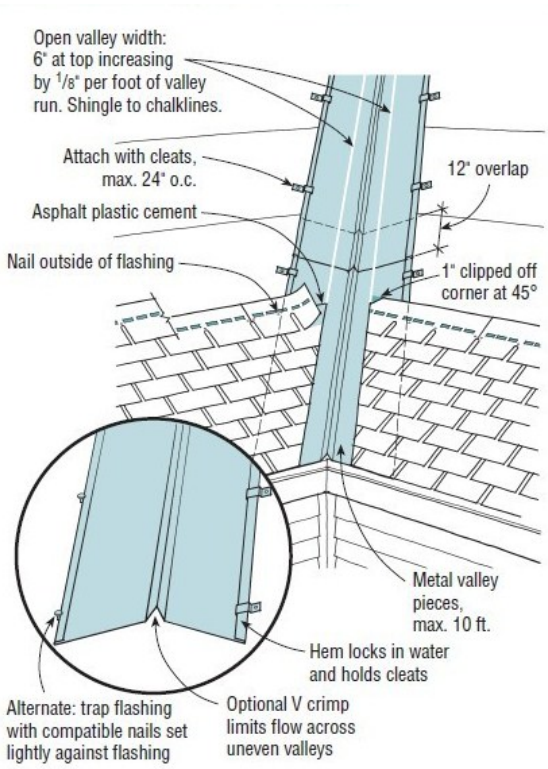

Open Valley

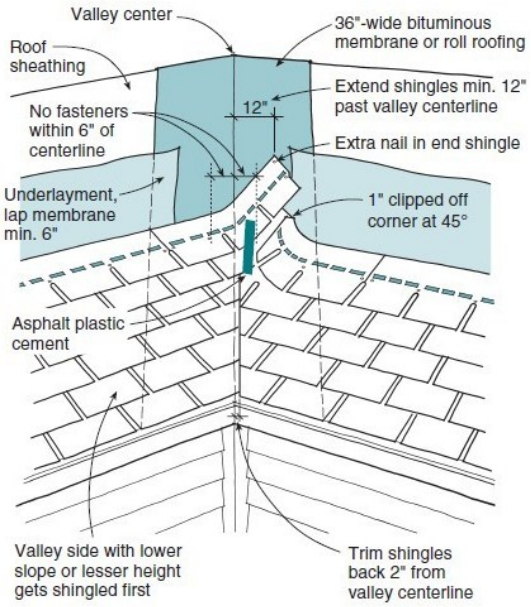

Closed Valley

TABLE R905.2.8.2
VALLEY LINING MATERIAL

MATERIAL	MINIMUM THICKNESS (Inches)	GAGE	WEIGHT (pounds)
Cold-rolled copper	0.0216 nominal	—	ASTM B 370, 16 oz. per square foot
Lead-coated copper	0.0216 nominal	—	ASTM B 101, 16 oz. per square foot
High-yield copper	0.0162 nominal	—	ASTM B 370, 12 oz. per square foot
Lead-coated high-yield copper	0.0162 nominal	—	ASTM B 101, 12 oz. per square foot
Aluminum	0.024	—	—
Stainless steel	—	28	—
Galvanized steel	0.0179	26 (zinc coated G90)	—
Zinc alloy	0.027	—	—
Lead	—	—	$2^1/_2$
Painted terne	—	—	20

For SI: 1 inch = 25.4 mm, 1 pound = 0.454 kg.

Base and cap flashing. Base and cap flashing shall be installed in accordance with manufacturer's installation instructions. Base flashing shall be of either corrosion-resistant metal of minimum nominal 0.019-inch thickness or mineral surface roll roofing weighing a minimum of 77 pounds per 100 square feet. Cap flashing shall be corrosion-resistant metal of minimum nominal 0.019-inch thickness.

Sidewall flashing. Base flashing against a vertical sidewall or chimney shall be continuous or step flashing and shall be a minimum of 4 inches in height and 4 inches in width and shall direct water away from the vertical sidewall onto the roof and/or into the gutter as shown in the diagram below. Where siding is provided on the vertical sidewall, the vertical leg of the flashing shall be continuous under the siding.

Crickets and saddles. A cricket or saddle shall be installed on the ridge side of any chimney or penetration more than 30 inches wide as measured perpendicular to the slope. Cricket or saddle coverings shall be sheet metal or of the same material as the roof covering.

Other flashing. Flashing against a vertical front wall, as well as soil stack, vent pipe and chimney flashing, shall be applied according to the asphalt shingle manufacturer's printed instructions.

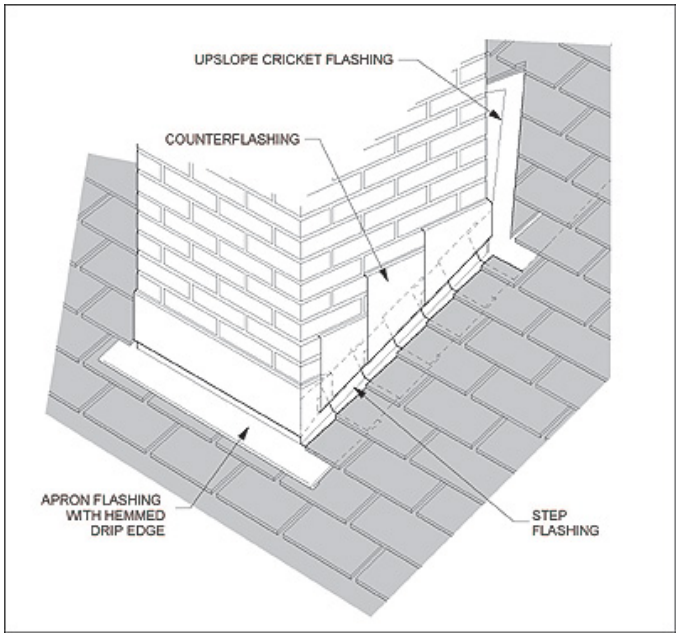

Drip edges. A drip edge shall be provided at eaves and gables of shingle roofs. Adjacent pieces of drip edge shall be overlapped a minimum of 2 inches. Drip edges shall extend a minimum of 1/4 inch below the roof sheathing and extend up the roof deck a minimum of 2 inches. Drip edges shall be mechanically fastened to the roof deck at a maximum of 12 inches o.c. with fasteners as specified in the fastening table of this section. Underlayment shall be installed over the drip edge along eaves and under the underlayment on gables. Unless specified differently by the shingle manufacturer, shingles are permitted to be flush with the drip edge.

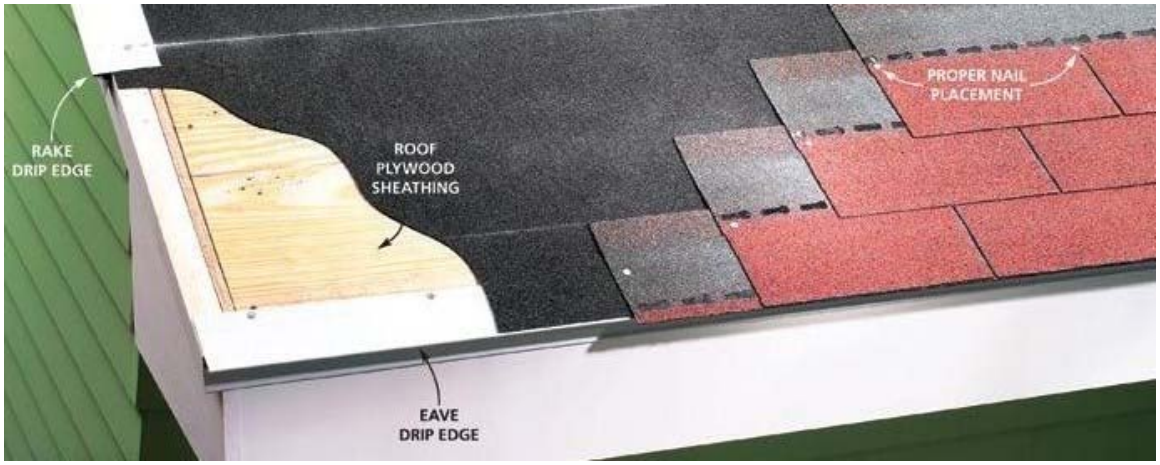

Ice barrier. An ice barrier that consists of a least two layers of underlayment cemented together or of a self-adhering polymer modified bitumen sheet shall be used in lieu of normal underlayment and extend from the lowest edges of all roof surfaces to a point at least 24 inches inside the exterior wall line of the building.
<u>Exception:</u> Detached *accessory structures* that contain no *conditioned floor area*.

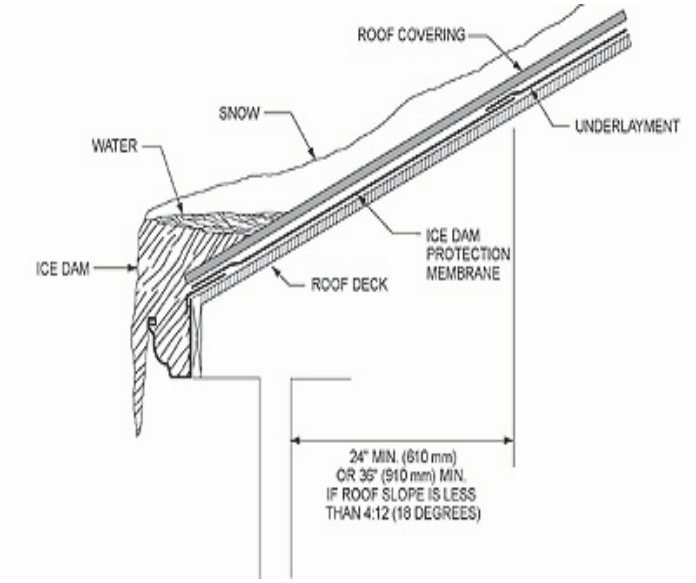

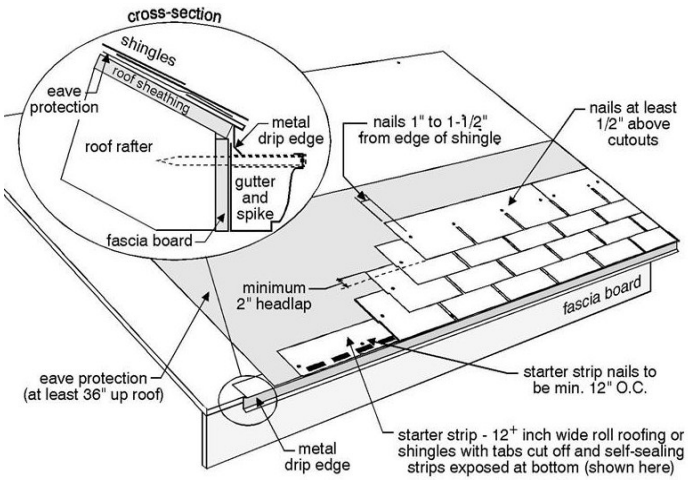

Reroofing: General. Materials and methods of application used for re-covering or replacing an existing roof covering shall comply with the requirements of this section. For replacement of like roofing (removing asphalt, reinstalling asphalt) no permit is needed but the following is code and must be followed. For reroofing involving a change in material (removing asphalt, installing metal roof), zoning ordinance and code requirements for construction of that material and manufacturers specifications shall apply.

Structural and construction loads. The structural roof components shall be capable of supporting the roof covering system and the material and equipment loads that will be encountered during installation of the roof covering system.

Recovering versus replacement. New roof coverings shall not be installed without first removing all existing layers of roof coverings where any of the following conditions exist:

1. Where the existing roof or roof covering is water soaked or has deteriorated to the point that the existing roof or roof covering is not adequate as a base for additional roofing.
2. Where the existing roof covering is wood shake, slate, clay, cement or asbestos-cement tile.
3. Where the existing roof has two or more applications of any type of roof covering.
   Exceptions:
   1. Complete and separate roofing systems, such as standing-seam metal roof systems, that are designed to transmit the roof loads directly to the building's structural system and that do not rely on existing roofs and roof coverings for support, shall not require the removal of existing roof coverings.
   2. Installation of metal panel, metal shingle and concrete and clay tile roof coverings over existing wood shake roofs shall be permitted when the application is in accordance with Section R907.4.
   3. The application of new protective coating over existing spray polyurethane foam roofing systems shall be permitted without tear-off of existing roof coverings.
   4. Where the existing roof assembly includes an ice barrier membrane that is adhered to the roof deck, the existing ice barrier membrane shall be permitted to remain in place and covered with an additional layer of ice barrier membrane in accordance with Section R905.

Roof recovering. Where the application of a new roof covering over wood shingle or shake roofs creates a combustible concealed space, the entire existing surface shall be covered with gypsum board, mineral fiber, glass fiber or other approved materials securely fastened in place.

Reinstallation of materials. Existing slate, clay or cement tile shall be permitted for reinstallation, except that damaged, cracked or broken slate or tile shall not be reinstalled. Any existing flashings, edgings, outlets, vents or similar devices that are a part of the assembly shall be replaced when rusted, damaged or deteriorated. Aggregate surfacing materials shall not be reinstalled.

Flashings. Flashings shall be reconstructed in accordance with approved manufacturer's installation instructions. Metal flashing to which bituminous materials are to be adhered shall be primed prior to installation.

Stairways

Please go to www.stairways.org where you can click on a link to download SMA Visual Interpretations. The link will take you to a page where you can order downloads or printed copies for the 2009 or 2012 International Residential Code versions. Please instead use the Older Stair Code Editions section at the bottom. The SMA Visual Interpretation of the Stairway Codes 2006 IRC is a free download and should be utilized for stair construction requirements. It would be included in this book but is copyrighted and cannot be reproduced. A stair detail such as the one below is available in the City Engineering or Finance departments and shall be submitted with any building permit that includes interior stairways. For exterior stairways, this form or the deck construction form may be utilized.

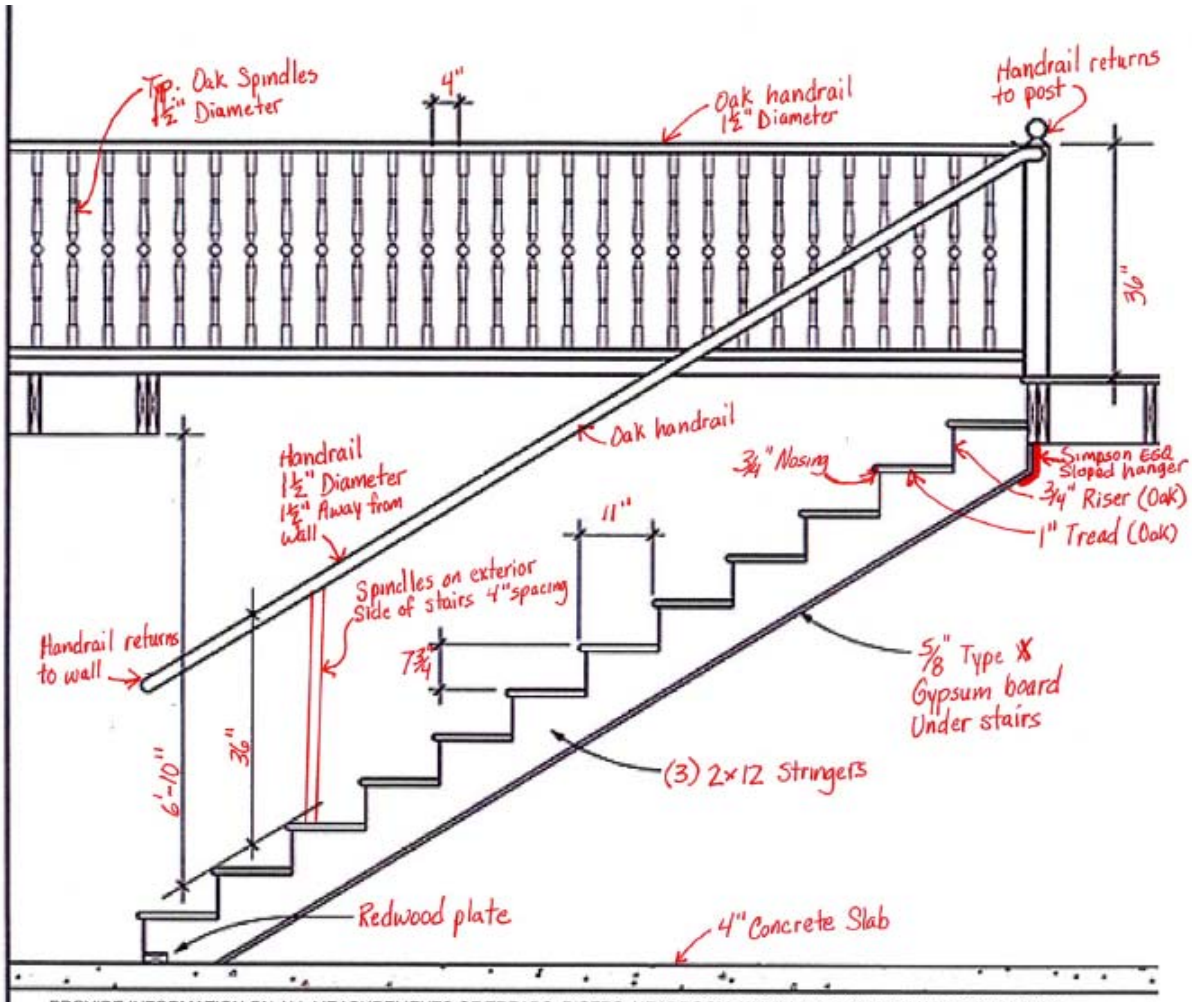

PROVIDE INFORMATION ON ALL MEASUREMENTS OF TREADS, RISERS, HEADROOM, WIDTH BETWEEN BALUSTERS ON BOTH HANDRAILS AND GUARDRAILS, NOSING SIZE, TYPE OF TREADS AND RISERS, NUMBER - TYPE - SIZE OF STRINGERS, HANDRAIL MATERIAL AND SIZES, DISTANCE OF HANDRAILS FROM WALL, HEIGHT OF GUARDRAILS AND HANDRAILS, THICKNESS AND TYPE OF GYPSUM BOARD UNDER STAIRS, THICKNESS OF CONCRETE AT LANDING IF IN A BASEMENT, PLATE TYPE AND THICKNESS, AND ALL OTHER IMPORTANT INFORMATION. SINCE THIS IS A GENERIC DRAWING PLEASE ALSO DRAW IN OR NOTE ANYTHING MISSING FROM YOUR STAIRWAY.

NOTE: HANDRAILS MUST BE MINIMUM 1-1/4" DIAMETER AND MAXIMUM OF 2" DIAMETER, BE 1-1/2" FROM WALL AND RETURN TO POST OR WALL IN ALL CASES

Egress Windows

Basements and every sleeping room shall have at least one operable emergency and rescue opening with a minimum clear opening (not overall size of window but clear opening) of 5.7 square feet. Such opening shall open directly into a public street, public alley, yard or court. Where basements contain one or more sleeping rooms, emergency egress and rescue openings shall be required in each sleeping room, but shall not be required in adjoining areas of the basement.

Where emergency escape and rescue openings are provided they shall have a sill height of not more than 44 inches above the floor. The net clear opening dimensions required by this section shall be obtained by the normal operation of the emergency escape and rescue opening from the inside.

Emergency escape and rescue openings with a finished sill height below the adjacent ground elevation shall be provided with a window well in which the minimum horizontal area of the window well shall be 9 square feet, with a minimum horizontal projection and width of 36 inches. The area of the window well shall allow the emergency escape and rescue opening to be fully opened. (see the diagram on the next page). Emergency escape and rescue openings shall open directly into a public way, or to a yard or court that opens to a public way. Window wells with a vertical depth greater than 44 inches shall be equipped with a permanently affixed ladder or steps usable with the window in the fully open position. Ladders or steps required by this section shall not be required to comply with the sections on stairways or ladders. Ladders or rungs shall have an inside width of at least 12 inches, shall project at least 3 inches from the wall and shall be spaced not more than 18 inches on center vertically for the full height of the window well. The ladder or steps shall be permitted to encroach a maximum of 6 inches into the required dimensions of the window well.

Bars, grilles, covers, screens or similar devices are permitted to be placed over emergency escape and rescue openings, bulkhead enclosures, or window wells that serve such openings, provided the minimum net clear opening size complies with the same requirement for the window, and such devices shall be releasable or removable from the inside without the use of a key, tool, special knowledge or force greater than that which is required for normal operation of the escape and rescue opening.

Emergency escape windows are allowed to be installed under decks and porches provided the location of the deck allows the emergency escape window to be fully opened and provides a path not less than 36 inches in height to a yard or court.

Egress windows in existing buildings may be required to be upgraded to meet egress requirements at the time of window replacement. Please contact City Engineering at 256-7513 for each case.

City of Madison
PO Box 308 · 116 W. Center Street · Madison, SD 57042
(605) 256-7514 · (605) 256-7511(Fax)
www.cityofmadisonsd.com

Minimum access WITH WINDOW FULLY OPEN: 36 inches measured horizontally from the foundation wall to the well and from the window surface to the well. Note: 3 foot by 3 foot wells WILL NOT provide the required access for a casement window.

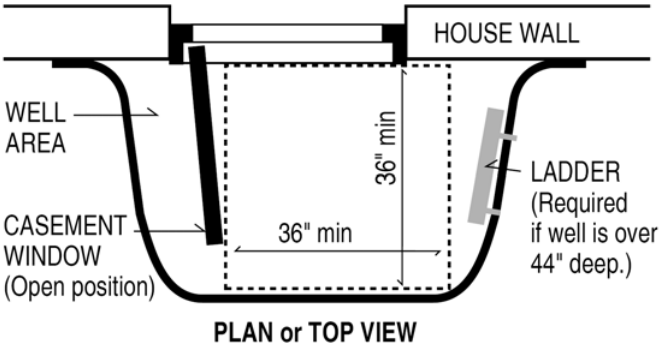

The minimum clear height for an egress window is 24” and the minimum clear width is 20” but please note that to achieve the 5.7 square feet openable requirement, you could not have a 20” by 24” window. Those dimensions would yield a net opening of only 3.3 square feet. To achieve the required net clear opening of 5.7 square feet, a 20” clear width window would have to be 41” clear high. Likewise, a 24” clear high window would have to be 34” in clear width. Please refer to chart below for common sizes.

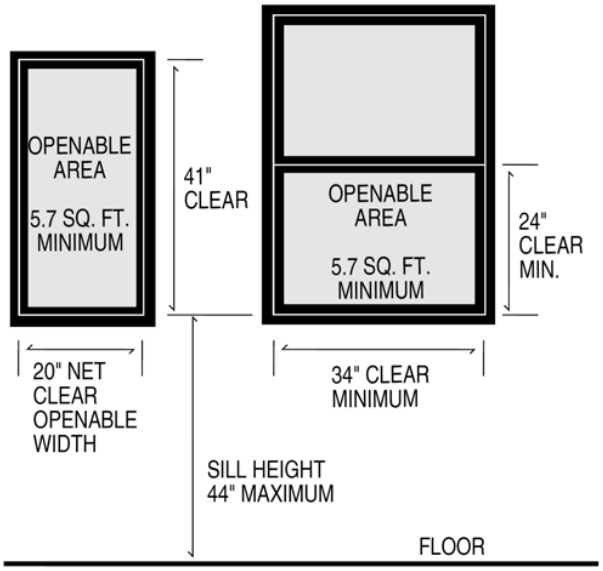

W	20	20.5	21	21.5	22	22.5	23	23.5	24	24.5
H	41.0	40.0	39.1	38.2	37.3	36.5	35.7	34.9	34.2	33.5

W	25	25.5	26	26.5	27	27.5	28	28.5	29	29.5
H	32.8	32.2	31.6	31.0	30.4	29.8	29.3	28.8	28.3	27.8

W	30	30.5	31	31.5	32	32.5	33	33.5	34
H	27.4	26.9	26.5	26.1	25.7	25.3	24.9	24.5	24

City of Madison
PO Box 308 · 116 W. Center Street · Madison, SD 57042
(605) 256-7514 · (605) 256-7511(Fax)
www.cityofmadisonsd.com

Smoke Alarms

All smoke alarms shall be listed in accordance with UL 217 and installed in accordance with the provisions of this code and the household fire warning equipment provisions of NFPA 72.Household fire alarm systems installed in accordance with NFPA 72 that include smoke alarms, or a combination of smoke detector and audible notification device installed as required by this section for smoke alarms, shall be permitted. The household fire alarm system shall provide the same level of smoke detection and alarm as required by this section for smoke alarms in the event the fire alarm panel is removed or the system is not connected to a central station. Smoke alarms shall be installed in the following locations:

1. In each sleeping room.
2. Outside each separate sleeping area in the immediate vicinity of the bedrooms.
3. On each additional story of the dwelling, including basements but not including crawl spaces and uninhabitable attics. In dwellings or dwelling units with split levels and without an intervening door between the adjacent levels, a smoke alarm installed on the upper level shall suffice for the adjacent lower level provided that the lower level is less than one full story below the upper level.

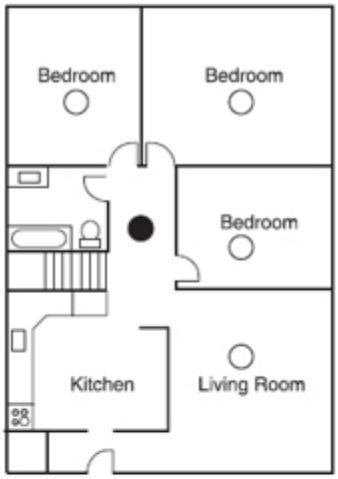

Figure 1

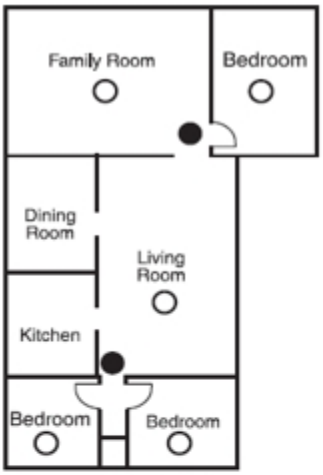

Figure 2

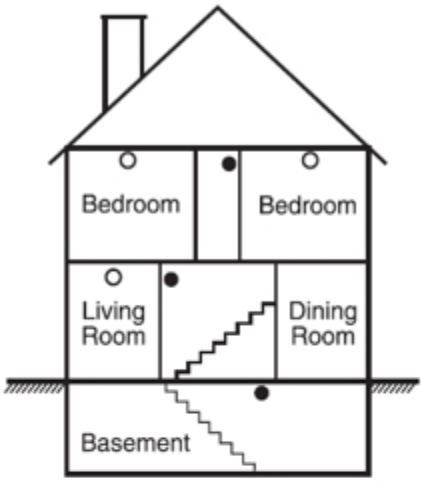

Figure 3

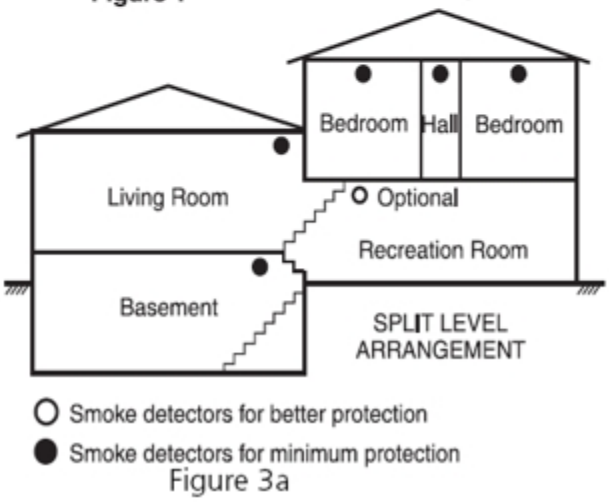

Figure 3a

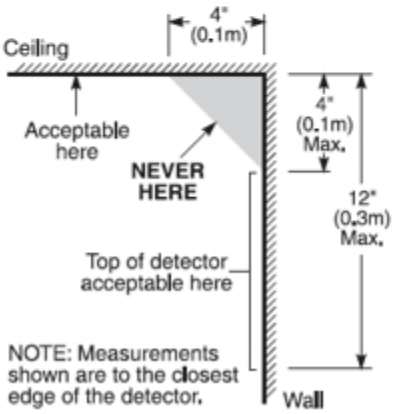

Figure 4

In all new construction, the required smoke detectors shall receive their primary power from the building wiring. When primary power is interrupted, it shall receive power from a battery. Wiring shall be permanent and without a disconnecting switch other than those required for over current protection. When alterations, repairs or additions requiring a permit occur, or when one or more sleeping rooms are added or created in existing dwellings, the individual dwelling unit shall be equipped with smoke alarms located as required for new dwellings so the smoke alarms shall be interconnected and hard wired.

Exceptions: Inter connection and hard-wiring of smoke alarms in existing areas shall not be required where the alterations or repairs do not result in the removal of interior wall or ceiling finishes exposing the structure, unless there is an attic, crawl space or basement available which could provide access for hard wiring and interconnection without the removal of interior finishes. Work involving the exterior surfaces of dwellings, such as the replacement of roofing or siding, or the addition or replacement of windows or doors, or the addition of a porch or deck, are exempt from the requirements of this section.

Specific locations within rooms:

- Smoke detectors must be mounted on the ceiling at least four inches from a wall or on a wall with the top of the detector not less than four inches, or more than 12 inches, below the ceiling.
- Smoke detectors should not be located within kitchens, garages or in other spaces where temperatures can fall below 32° F or exceed 100° F.
- Smoke detectors should not be located within three feet of supply registers for a forced air heating or cooling system and doors to a kitchen or bathroom with tub or shower because these conditions cause excessive, erratic and unreliable operations.
- Smoke detectors in rooms with ceiling slopes greater than 1-foot rise per 8 feet horizontally shall be located at the high side of the room.
- A smoke detector installed in a stairwell should be located to ensure that smoke rising in the stairwell cannot be prevented from reaching the detector by an intervening door or obstruction.
- If there are no bedrooms in the basement, there commended location of the detector is then in close proximity to the stairway leading to the floor above.
- Smoke detectors should not be located within 36 inches horizontally of ceiling fan blades.
- Life expectancy of smoke detectors is about 10 years. When replacing a hardwired smoke detector the replacement must also be hardwired.
- Smoke detectors must be adequately secured.
- In all cases install smoke detectors according to the manufacturer's instructions.

Smoke detector placement in sleeping room

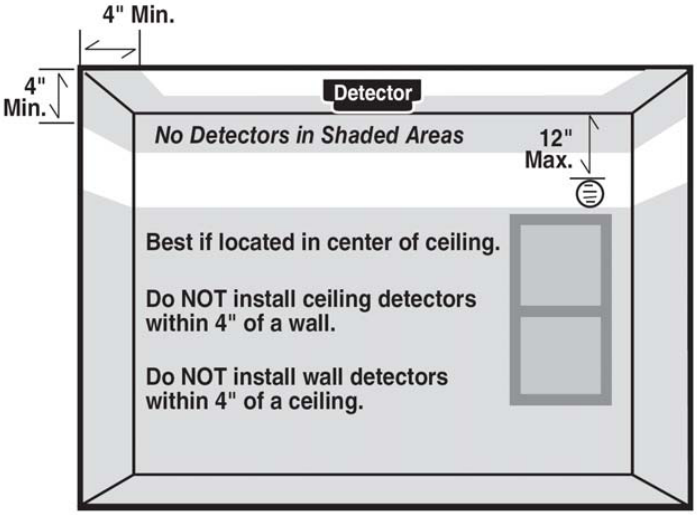

City of Madison
PO Box 308 · 116 W. Center Street · Madison, SD 57042
(605) 256-7514 · (605) 256-7511(Fax)
www.cityofmadisonsd.com

Carbon Monoxide Detectors

Carbon monoxide alarms. For new construction, an approved carbon monoxide alarm shall be installed outside of each separate sleeping area in the immediate vicinity of the bedrooms in dwelling units within which fuel-fired appliances are installed and in dwelling units that have attached garages.

Carbon monoxide detection systems. Carbon monoxide detection systems that include carbon monoxide detectors and audible notification appliances, installed and maintained in accordance with this section for carbon monoxide alarms and NFPA 720, shall be permitted. The carbon monoxide detectors shall be listed as complying with UL 2075. Where a household carbon monoxide detection system is installed, it shall become a permanent fixture of the occupancy, owned by the homeowner and shall be monitored by an approved supervising station.

Where required in existing dwellings. Where work requiring a permit occurs in existing dwellings that have attached garages or in existing dwellings within which fuel fired appliances exist, it is recommended but not required that carbon monoxide alarms shall be provided.

Alarm requirements. Single-station carbon monoxide alarms shall be listed as complying with UL 2034 and shall be installed in accordance with the manufacturer's installation instructions.

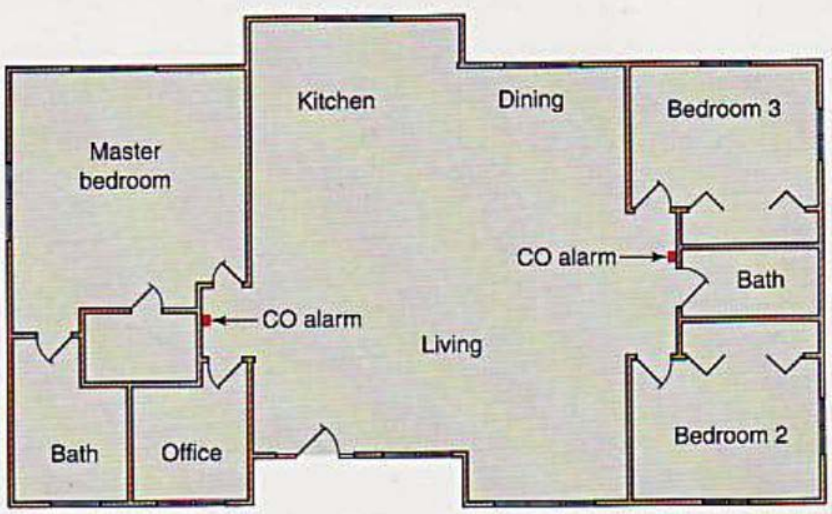

Carbon monoxide (CO) alarm installed in the immediate vicinity of each sleeping area

City of Madison
PO Box 308 · 116 W. Center Street · Madison, SD 57042
(605) 256-7514 · (605) 256-7511(Fax)
www.cityofmadisonsd.com

Dwelling Unit Separation

Two-family dwellings: Dwelling units in two-family dwellings (without a platted property line) shall be separated from each other by a wall and/or floor assembly of not less than 1 hour fire-resistive rating. Fire-resistance rated floor ceiling assemblies shall extend to and be tight against the exterior wall, and wall assemblies shall extend to the underside of the roof sheathing.

Exceptions:
1. A fire-resistance rating of 1/2 hour shall be permitted in buildings equipped throughout with an automatic sprinkler system installed in accordance with NFPA 13.

2. Wall assemblies need not extend through attic spaces when the ceiling is protected by not less than 5/8" Type X sheetrock and an attic draft stop (see draft stop section of this book for details) is provided above and along the wall assembly separating the dwellings. The structural framing supporting the ceiling shall also be protected by not less than 1/2" sheetrock (or equivalent).

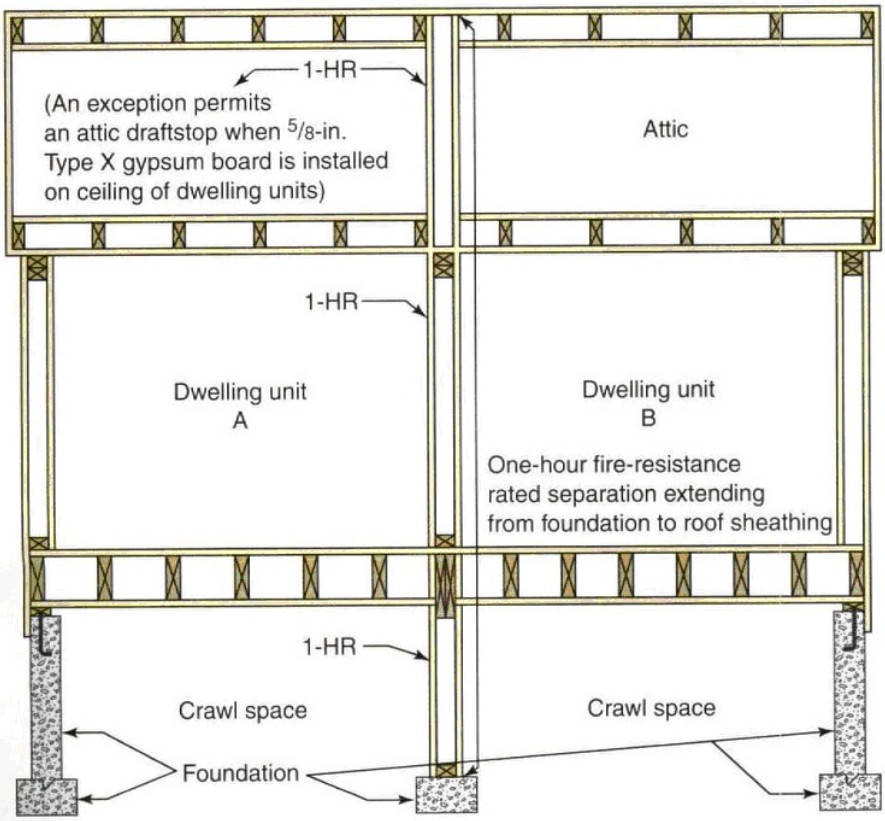

Two-family dwelling separation wall

Townhouses: IRC - Each townhouse which has a platted property line located between dwelling units, shall be considered a separate building and shall be separated by one-hour fire-resistance rated wall assemblies on each side of the platted property line. A common two-hour fire-resistance rated wall is permitted for townhouses in lieu of the two one-hour assemblies (see diagram). For IBC structures see note below.

Continuity. The fire-resistance-rated wall or assembly separating townhouses shall be continuous from the foundation to the underside of the roof sheathing, deck or slab.

Structural independence. Each individual townhouse shall be structurally independent.
Exceptions:
1. Foundations supporting exterior walls or common walls.
2. Structural roof and wall sheathing from each unit may fasten to the common wall framing.
3. Nonstructural wall and roof coverings.
4. Flashing at termination of roof covering over common wall.

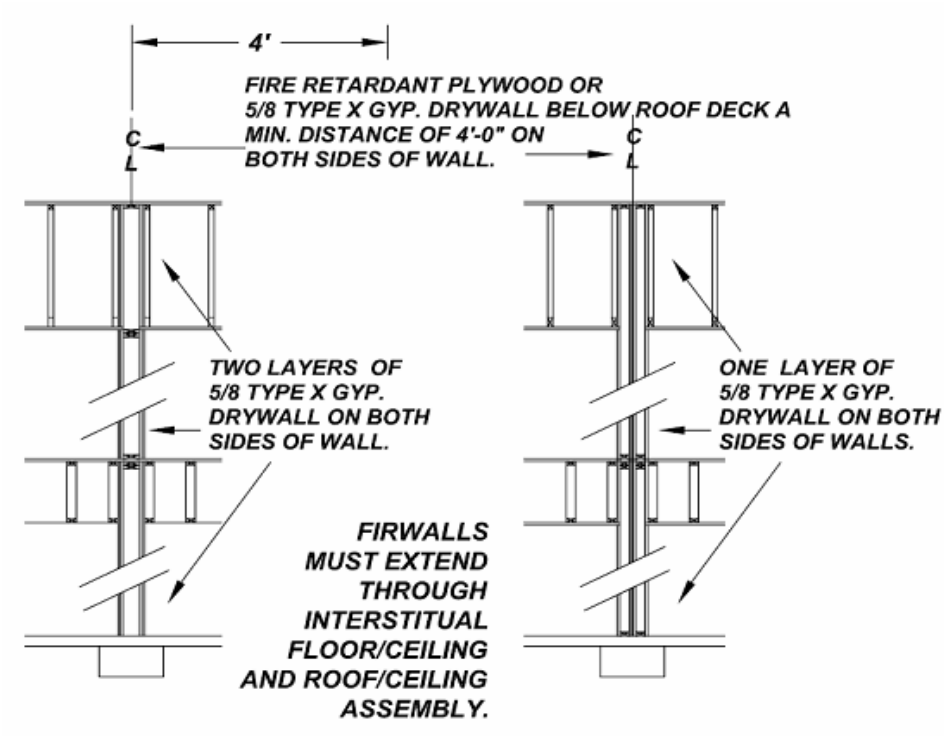

IBC 903.2.8 Group R. An automatic sprinkler system installed in accordance with Section 903.3 shall be provided throughout all buildings with Groups R-1 and R-4 fire areas. An automatic fire-extinguishing system shall be provided throughout all buildings with a Group R-2 fire area more than two stories in height, including basements, or having more than 5 dwelling units.

Glazing

Except as indicated in Section each pane of glazing installed in hazardous locations shall be provided with a manufacturer's designation specifying who applied the designation, designating the type of glass and the safety glazing standard with which it complies, which is visible in the final installation. The designation shall be acid etched, sandblasted, ceramic-fired, laser etched, embossed, or be of a type which once applied cannot be removed without being destroyed. A *label* shall be permitted in lieu of the manufacturer's designation.

Impact test. Where required by other sections of the code, glazing shall be tested in accordance with CPSC 16 CFR 1201. Glazing shall comply with the test criteria for Category II unless otherwise indicated in Table R308.3.1(1).

TABLE R308.3.1(1)
MINIMUM CATEGORY CLASSIFICATION OF GLAZING USING CPSC 16 CFR 1201

EXPOSED SURFACE AREA OF ONE SIDE OF ONE LITE	GLAZING IN STORM OR COMBINATION DOORS (Category Class)	GLAZING IN DOORS (Category Class)	GLAZED PANELS REGULATED BY SECTION R308.4.3 (Category Class)	GLAZED PANELS REGULATED BY SECTION R308.4.2 (Category Class)	GLAZING IN DOORS AND ENCLOSURES REGULATED BY SECTION 308.4.5 (Category Class)	SLIDING GLASS DOORS PATIO TYPE (Category Class)
9 square feet or less	I	I	NR	I	II	II
More than 9 square feet	II	II	II	II	II	II

For SI: 1 square foot = 0.0929 m².
NR means "No Requirement."

Hazardous locations. The locations specified below shall be considered specific hazardous locations for the purposes of glazing.

Glazing adjacent doors. Glazing in an individual fixed or operable panel adjacent to a door where the nearest vertical edge of the glazing is within a 24-inch arc of either vertical edge of the door in a closed position and where the bottom exposed edge of the glazing is less than 60 inches above the floor or walking surface shall be considered a hazardous location.

Exceptions:
1. Decorative glazing.
2. When there is an intervening wall or other permanent barrier between the door and the glazing.
3. Glazing in walls on the latch side of and perpendicular to the plane of the door in a closed position.
4. Where access through the door is to a closet or storage area 3 feet or less in depth. Glazing in this application shall comply with the glazing in windows section on next page.
5. Glazing that is adjacent to the fixed panel of patio doors.

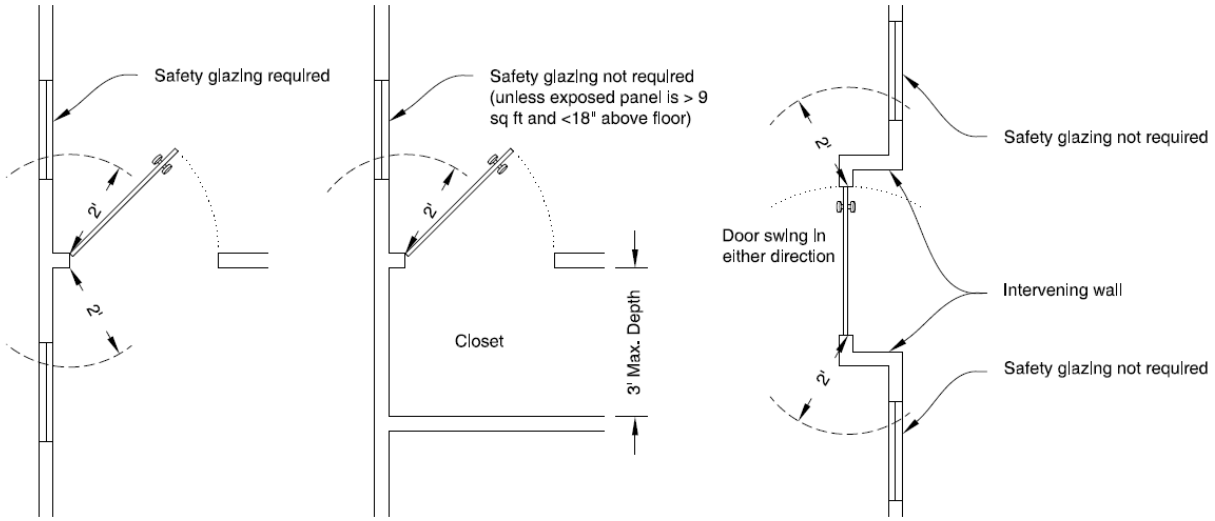

Glazing in windows. Glazing in an individual fixed or operable panel that meets all of the following conditions shall be considered a hazardous location:

1. The exposed area of an individual pane is larger than 9 square feet;
2. The bottom edge of the glazing is less than 18 inches above the floor;
3. The top edge of the glazing is more than 36 inches above the floor; and
4. One or more walking surfaces are within 36 inches, measured horizontally and in a straight line, of the glazing.

Glazing in doors. Glazing in all fixed and operable panels of swinging, sliding and bi fold doors shall be considered a hazardous location. Glazing in an individual fixed or operable panel adjacent to a door where the nearest vertical edge of the glazing is within a 24-inch arc of either vertical edge of the door in a closed position and where the bottom exposed edge of the glazing is less than 60 inches above the floor or walking surface shall be considered a hazardous location.
Exceptions:

1. Glazed openings of a size through which a 3-inch-diameter sphere is unable to pass.
2. Decorative glazing.

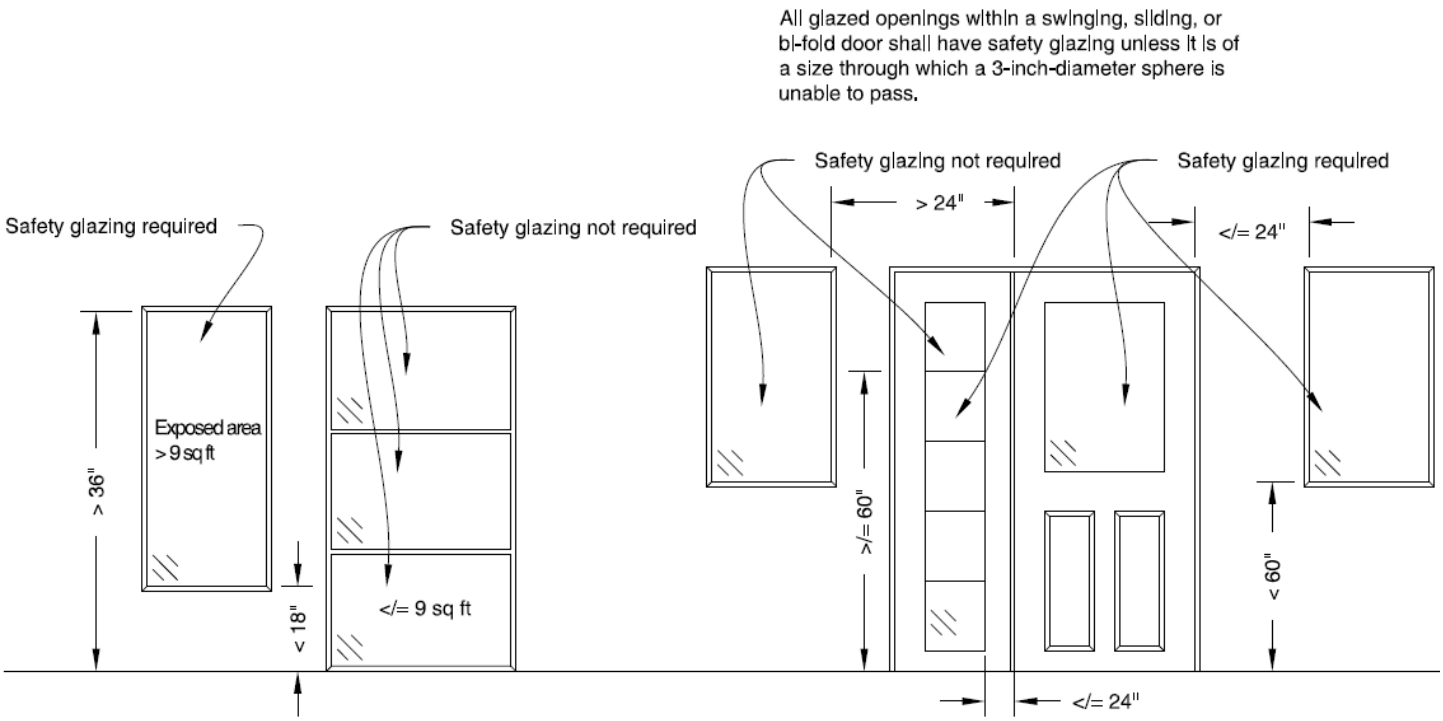

Glazing adjacent stairs and ramps. Glazing where the bottom exposed edge of the glazing is less than 36 inches above the plane of the adjacent walking surface of stairways, landings between flights of stairs and ramps shall be considered a hazardous location.
Exceptions:

1. When a rail is installed on the accessible side(s) of the glazing 34 to 38 inches above the walking surface. The rail shall be capable of withstanding a horizontal load of 50 pounds per linear foot without contacting the glass and be a minimum of 1-1/2 inches in cross sectional height.
2. Glazing 36 inches or more measured horizontally from the walking surface.

Glazing adjacent to the bottom stair landing. Glazing adjacent to the landing at the bottom of a stairway where the glazing is less than 36 inches above the landing and within 60 inches horizontally of the bottom tread shall be considered a hazardous location.

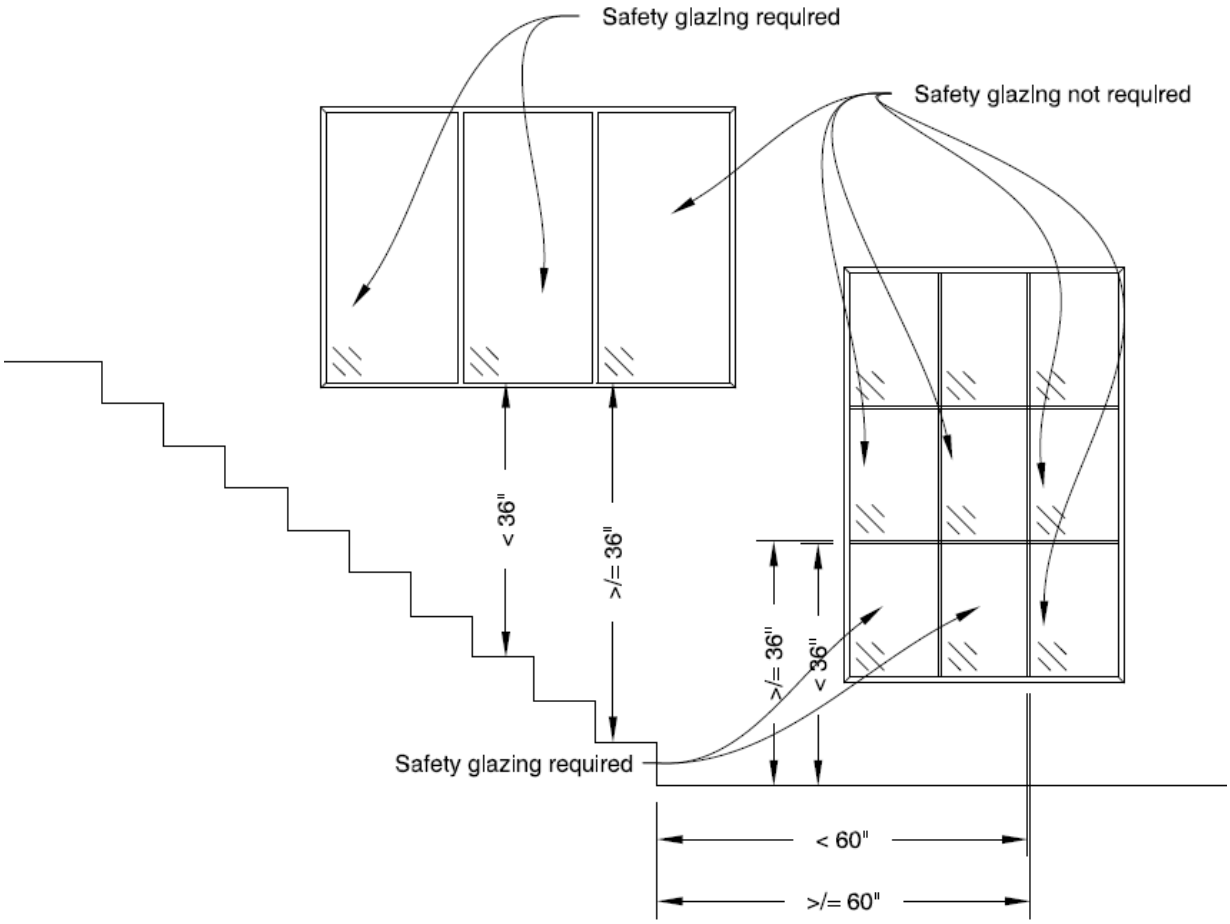

Glazing and wet surfaces. Glazing in walls, enclosures or fences containing or facing hot tubs, spas, whirlpools, saunas, steam rooms, bathtubs, showers and indoor or outdoor swimming pools where the bottom exposed edge of the glazing is less than 60 inches measured vertically above any standing or walking surface shall be considered a hazardous location. This shall apply to single glazing and all panes in multiple glazing.

Exception: Glazing that is more than 60 inches, measured horizontally and in a straight line, from the water's edge of a bathtub, hot tub, spa, whirlpool, or swimming pool.

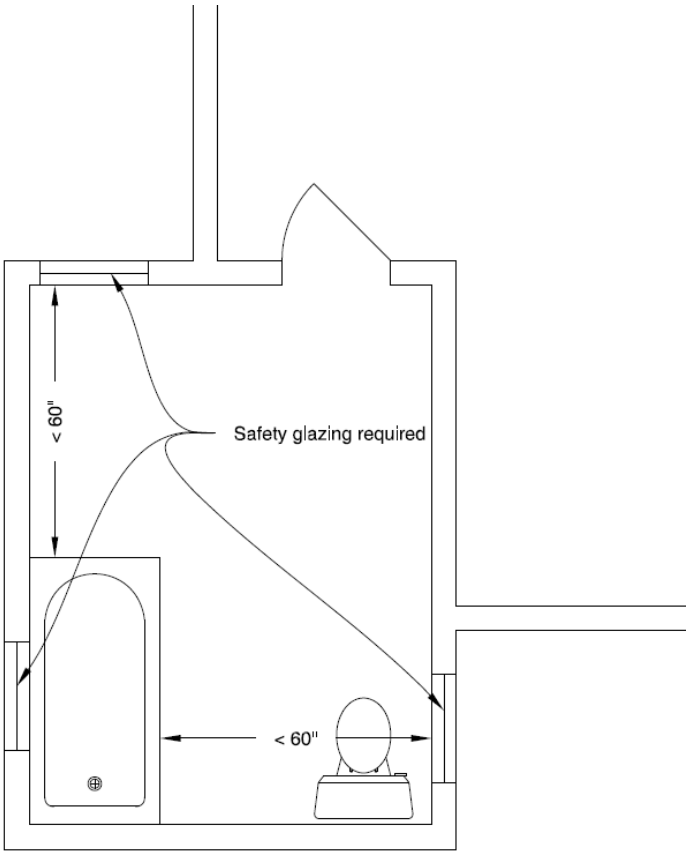

Toilet, Bath and Shower Spaces

Fixtures shall be spaced in accordance with Figure R307.1, and in accordance with the requirements of plumbing code.

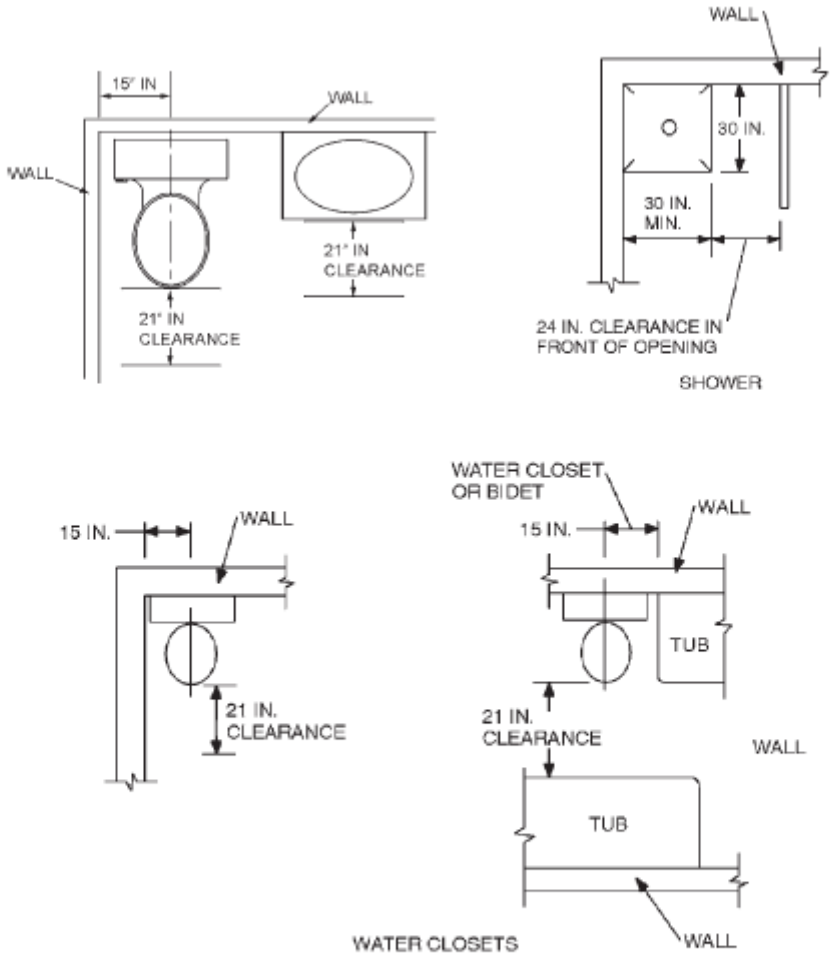

For SI: 1 inch = 25.4 mm.

FIGURE R307.1
MINIMUM FIXTURE CLEARANCES

2012 INTERNATIONAL RESIDENTIAL CODE®

Light/Ventilation, and Heating

Habitable rooms. All habitable rooms shall have an aggregate glazing area of not less than 8 percent of the floor area of such rooms. Natural ventilation shall be through windows, doors, louvers or other approved openings to the outdoor air. Such openings shall be provided with ready access or shall otherwise be readily controllable by the building occupants. The minimum openable area to the outdoors shall be 4 percent of the floor area being ventilated.

Exception:The glazed areas need not be openable where the opening is not an egress window and a whole-house mechanical ventilation system is installed in accordance with this section.

Adjoining rooms. For the purpose of determining light and ventilation requirements, any room shall be considered as a portion of an adjoining room when at least one-half of the area of the common wall is open and unobstructed and provides an opening of not less than one-tenth of the floor area of the interior room but not less than 25 square feet.

Exception: Openings required for light and/or ventilation shall be permitted to open into a sunroom with thermal isolation or a patio cover, provided that there is an openable area between the adjoining room and the sunroom or patio cover of not less than one-tenth of the floor area of the interior room but not less than 20 square feet. The minimum openable area to the outdoors shall be based upon the total floor area being ventilated.

Bathrooms. Bathrooms, water closet compartments and other similar rooms shall be provided with aggregate glazing area in windows of not less than 3 square feet, one-half of which must be openable. Exception: The glazed areas shall not be required where artificial light and a local exhaust system are provided. The minimum local exhaust rates shall be determined in accordance with mechanical code.

Exhaust air from the space shall be exhausted <u>directly to the outdoors</u> and shall not go into the attic.

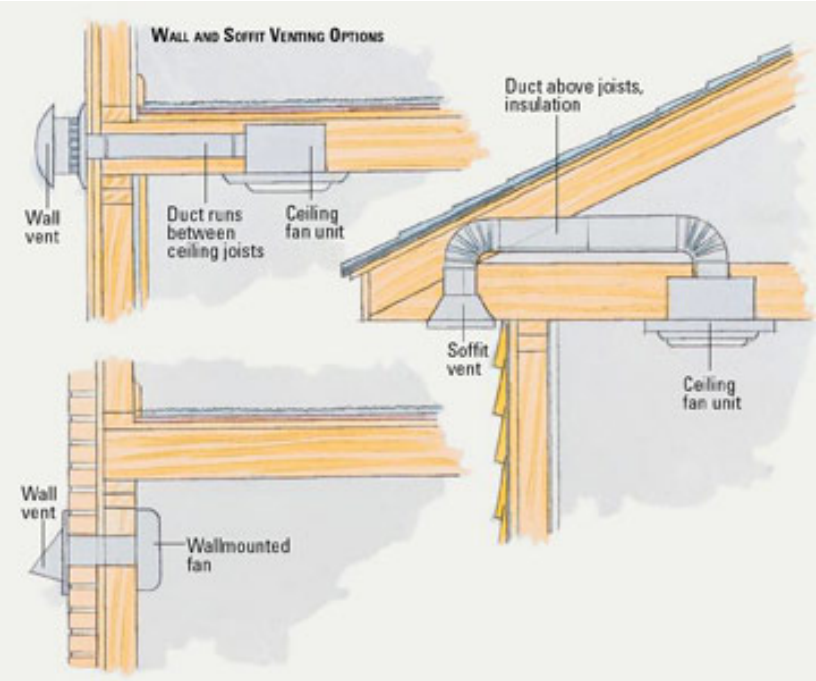

Intake openings. Mechanical and gravity outdoor air intake openings shall be located a minimum of 10 feet from any hazardous or noxious contaminant, such as vents, chimneys, plumbing vents, streets, alleys, parking lots and loading docks, except as otherwise specified in this code. Where a source of contaminant is located within 10 feet of an intake opening, such opening shall be located a minimum of 3 feet below the contaminant source. For the purpose of this section, the exhaust from dwelling unit toilet rooms, bathrooms and kitchens shall not be considered as hazardous or noxious.

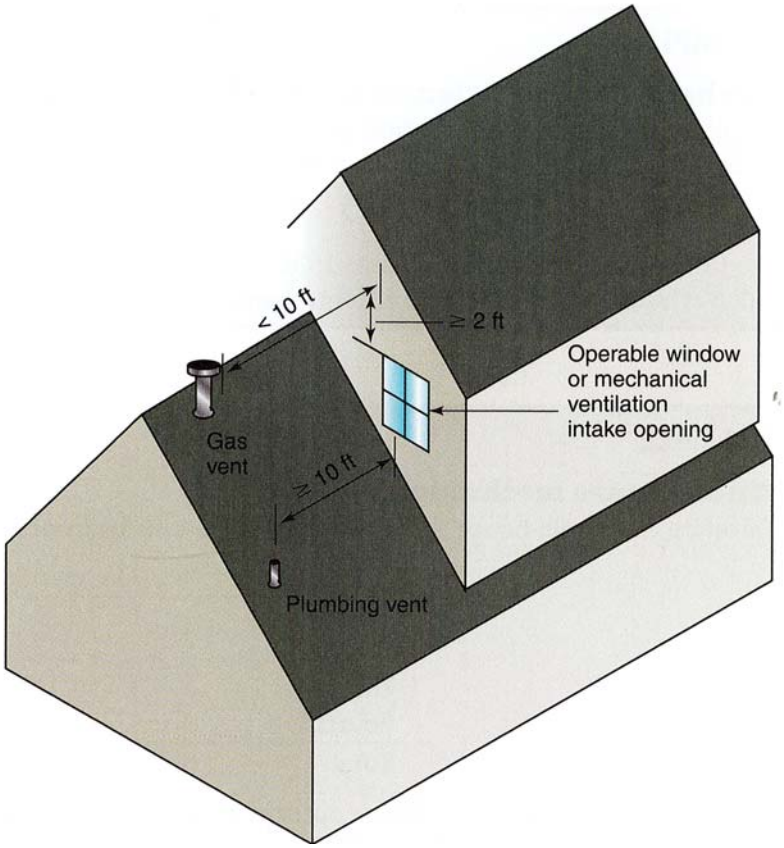

Exhaust openings. Exhaust air shall not be directed onto walkways.

Outside opening protection. Air exhaust and intake openings that terminate outdoors shall be protected with corrosion- resistant screens, louvers or grilles having a minimum opening size of 1/4 inch and a maximum opening size of 1/2 inch, in any dimension. Openings shall be protected against local weather conditions. Outdoor air exhaust and intake openings shall meet the provisions for exterior wall opening protectives in accordance with this code.

Required heating. Every *dwelling unit* shall be provided with heating facilities capable of maintaining a minimum room temperature of 68°F at a *p*oint 3 feet above the floor and 2 feet from exterior walls in all habitable rooms at the design temperature. The installation of one or more portable space heaters shall not be used to achieve compliance with this section.

Whole-house mechanical ventilation

Mechanical ventilation. Where the air infiltration rate of a dwelling unit is less than 5 air changes per hour, the dwelling unit shall be provided with whole-house mechanical ventilation. It is assumed unless proved otherwise by a blower door test that air-infiltration is less than 5 air changes per hour.

System design. The whole-house ventilation system shall consist of one or more supply or exhaust fans, or a combination of such, and associated ducts and controls. Local exhaust or supply fans are permitted to serve as such a system. Outdoor air ducts connected to the return side of an air handler shall be considered to provide supply ventilation.
System controls. The whole-house mechanical ventilation system shall be provided with controls that enable manual override.
Mechanical ventilation rate. The whole house mechanical ventilation system shall provide outdoor air at a continuous rate of not less than that determined in accordance with Table M1507.3.3(1).

Exception: The whole-house mechanical ventilation system is permitted to operate intermittently where the system has controls that enable operation for not less than 25-percent of each 4-hour segment and the ventilation rate prescribed in Table M1507.3.3(1) is multiplied by the factor determined in accordance with Table M1507.3.3(2).

Local exhaust rates. *Local exhaust* systems shall be designed to have the capacity to exhaust the minimum air flow rate determined in accordance with Table M1507.4.

TABLE M1507.4
MINIMUM REQUIRED LOCAL EXHAUST RATES FOR ONE- AND TWO-FAMILY DWELLINGS

AREA TO BE EXHAUSTED	EXHAUST RATES
Kitchens	100 cfm intermittent or 25 cfm continuous
Bathrooms-Toilet Rooms	Mechanical exhaust capacity of 50 cfm intermittent or 20 cfm continuous

TABLE M1507.3.3(1)
CONTINUOUS WHOLE-HOUSE MECHANICAL VENTILATION SYSTEM AIRFLOW RATE REQUIREMENTS

DWELLING UNIT FLOOR AREA (square feet)	NUMBER OF BEDROOMS				
	0 – 1	2 – 3	4 – 5	6 – 7	> 7
	Airflow in CFM				
< 1,500	30	45	60	75	90
1,501 – 3,000	45	60	75	90	105
3,001 – 4,500	60	75	90	105	120
4,501 – 6,000	75	90	105	120	135
6,001 – 7,500	90	105	120	135	150
> 7,500	105	120	135	150	165

For SI: 1 square foot = 0.0929 m^2, 1 cubic foot per minute = 0.0004719 m^3/s.

TABLE M1507.3.3(2)
INTERMITTENT WHOLE-HOUSE MECHANICAL VENTILATION RATE FACTORS[a, b]

RUN-TIME PERCENTAGE IN EACH 4-HOUR SEGMENT	25%	33%	50%	66%	75%	100%
Factor[a]	4	3	2	1.5	1.3	1.0

a. For ventilation system run time values between those given, the factors are permitted to be determined by interpolation.
b. Extrapolation beyond the table is prohibited.

MADISON South Dakota
Engineering Department

Prescriptive Residential Wood Deck

A deck construction form such as the one below is available in the City Engineering or Finance departments and shall be submitted with any building permit that includes deck construction. In addition to the information in this section, a good resource is http://www.awc.org/Publications/DCA/DCA6/DCA6-09.pdf

DECK NOT ATTACHED TO HOUSE
For Attached Deck use the other side of form

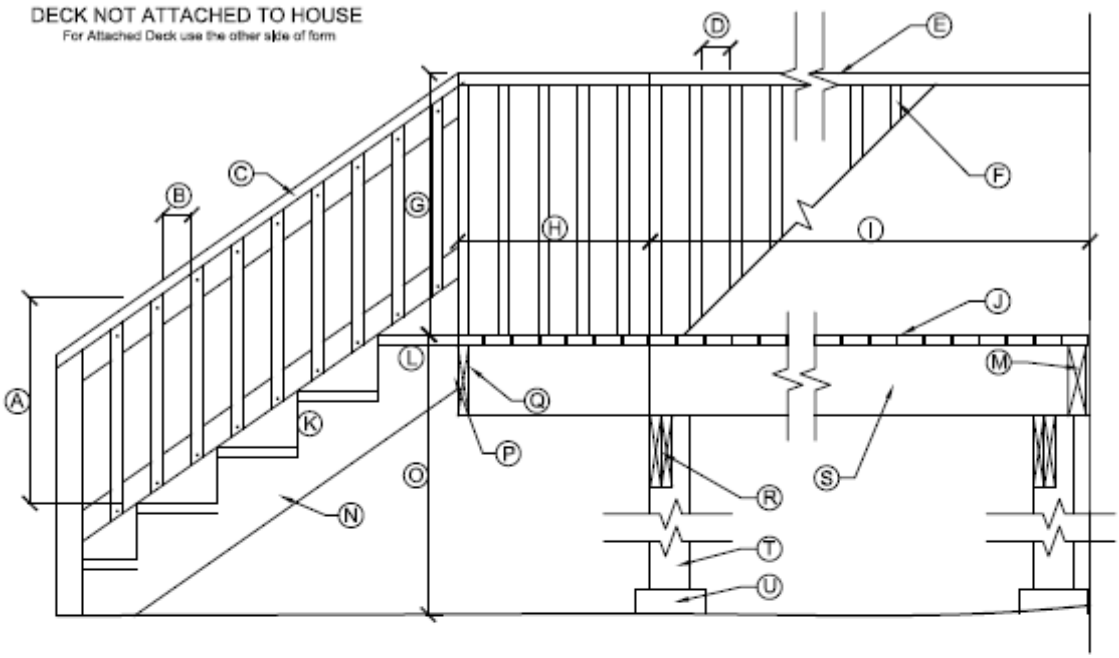

OVERALL SIZE OF DECK	_____ FEET BY _____ FEET
A HANDRAIL HEIGHT FROM NOSING	_____"
B HANDRAIL SPINDLE SPACING	_____"
C GRASPABLE HANDRAIL	SIZE_____"X_____" MATERIAL _____
D GUARDRAIL SPINDLE SPACING	_____"
E GUARDRAIL TOP MATERIAL	SIZE_____" x _____" MATERIAL_____
F GUARDRAIL AND HANDRAIL SPINDLE	SIZE_____" x _____" MATERIAL_____
G GUARDRAIL HEIGHT	_____"
H CANTILEVER WIDTH	_____'- _____"
I DECK WIDTH BETWEEN SUPPORTS	_____'- _____"
J DECKING MATERIAL	SIZE_____" x _____" MATERIAL_____
K RISER HEIGHT	_____" OPEN RISER?_____ IF YES STATE OPENING SIZE_____"
L TREAD WIDTH AND MATERIAL	SIZE _____" x _____" MATERIAL_____
M RIM JOIST	SIZE _____" x _____" MATERIAL_____
N STRINGER MATERIAL	_____" X _____" NUMBER OF STRINGERS OR SPACING _____
O HEIGHT OF DECK ABOVE GROUND	_____"
P CONNECTION STRINGER TO RIM JOIST	_____
Q RIM JOIST SIZE AND MATERIAL	_____" X _____" MATERIAL_____
R BEAM SIZES	SIZE _____" x _____" @_____" O.C.
S JOIST TYPE, SIZE, SPACING, & SPAN	SIZE _____" x _____" MATERIAL_____@_____"O.C._____" SPAN.
T POST MATERIAL AND SPACING	SIZE _____" x _____" @ _____" O.C.
U FOOTING OR PIER	SIZE_____" x _____" DEPTH_____"

City of Madison
PO Box 308 · 116 W. Center Street · Madison, SD 57042
(605) 256-7514 · (605) 256-7511(*Fax*)
www.cityofmadisonsd.com

Figure 1A: Joist Span – Deck Attached at House and Bearing Over Beam

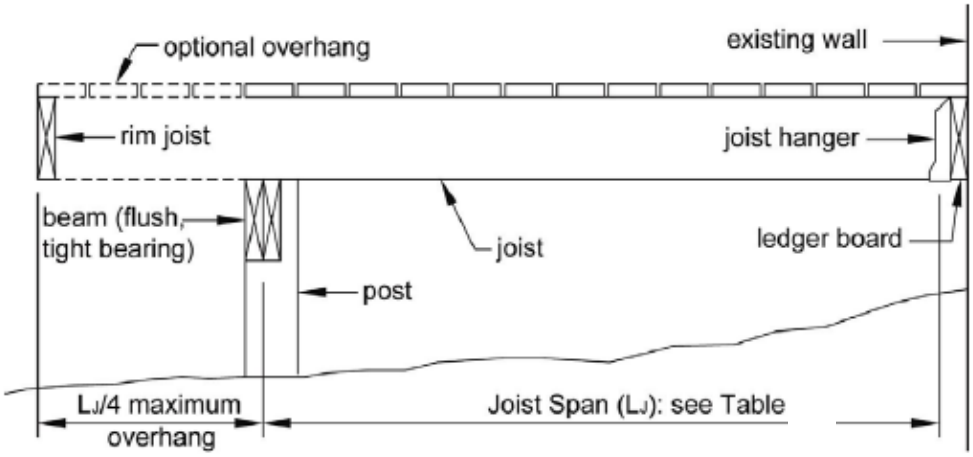

Figure 1B: Joist Span – Joists Attached at House and to Side of Beam

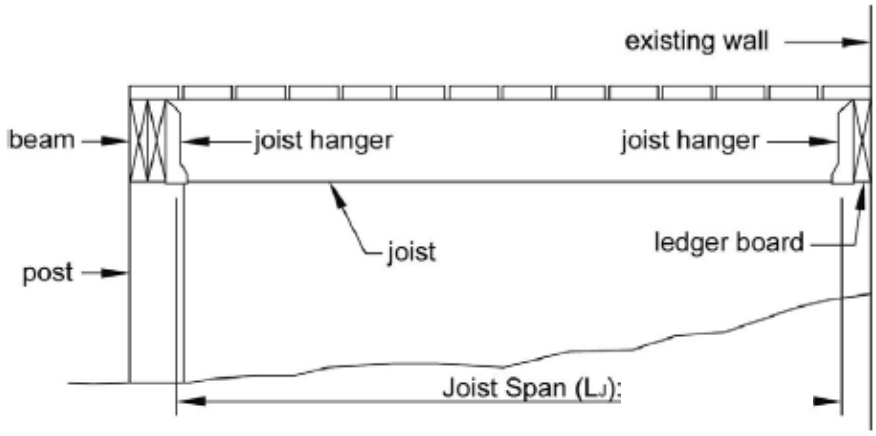

Figure 2: Joist Span – Free Standing Deck

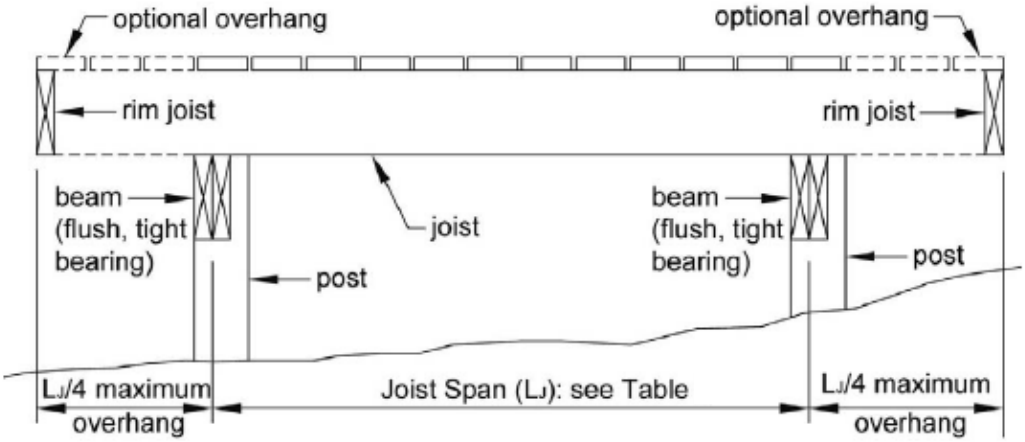

Figure 8: Post-to-Beam Attachment Requirements

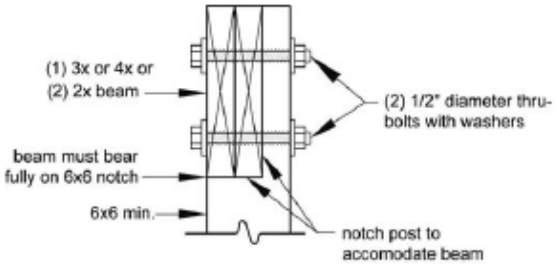

Figure 9: Prohibited Post-to-Beam Attachment Condition

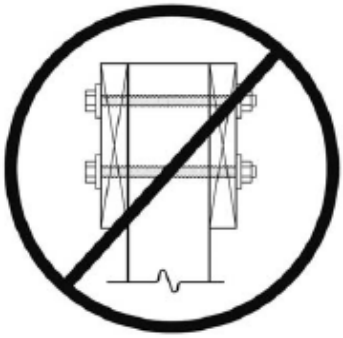

RIM JOIST REQUIREMENTS

Attach a continuous rim joist to the ends of joists as shown in Figure 11. Attach decking to the rim joist as shown in Figure 11. For more decking attachment requirements, see DECKING REQUIREMENTS.

Figure 10: Alternate Approved Post-to-Beam Post Cap Attachment

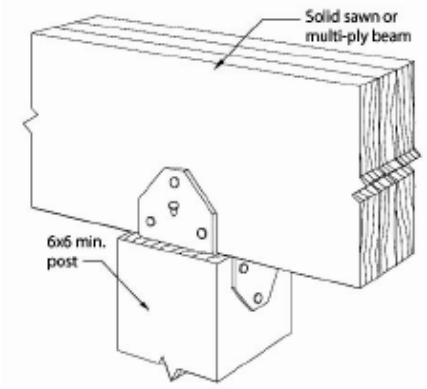
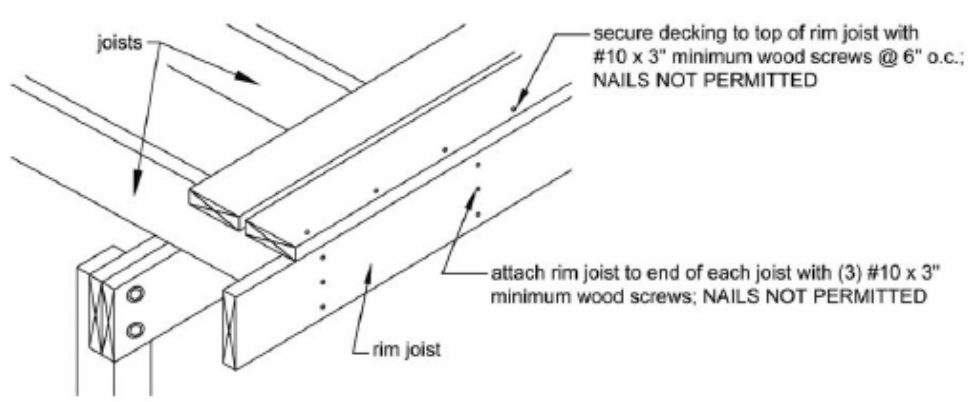
Figure 11: Rim Joist Connection Details